GE Digital Energy
Power Quality

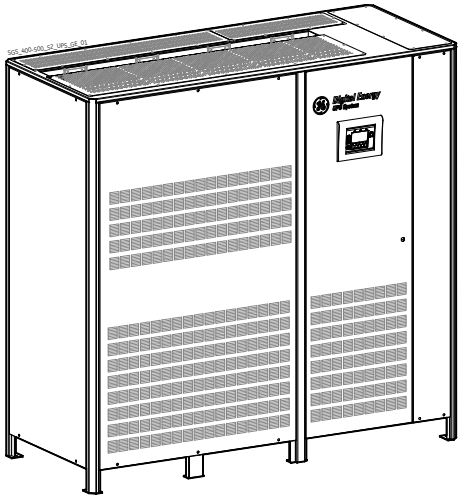

Installation Guide

Uninterruptible Power supply

SG Series 400 & 500

400 & 500 kVA / 480Vac UL / S2

GE Consumer & Industrial SA
General Electric Company
CH – 6595 Riazzino (Locarno)
Switzerland
T +41 (0)91 / 850 51 51
F +41 (0)91 / 850 52 52
www.gepowerquality.com

imagination at work

c UL us LISTED

Certified Quality System
ISO 9001

Model:	***SG Series 400 & 500 UL S2***
Issued by	Product Document Department – Riazzino - CH
Date of issue:	06/15/2010
File name:	OPM_SGT_ISG_M40_M50_2US_V010
Revision:	1.0
Identification No.:	

Up-dating		
Revision	Concerns	Date

COPYRIGHT © 2010 by *GE Consumer & Industrial SA*

All rights reserved.

The information contained in this publication is intended solely for the purposes indicated.

The present publication and any other documentation supplied with the UPS system is not to be reproduced, either in part or in its entirety, without the prior written consent of ***GE***.

The illustrations and plans describing the equipment are intended as general reference only and are not necessarily complete in every detail.

The content of this publication may be subject to modification without prior notice.

Dear Customer,

We thank you for selecting our products and are pleased to count you amongst our very valued customers at ***GE***.

We trust that the use of the ***SG Series 400 & 500*** Uninterruptible Power Supply system, developed and produced to the highest standards of quality, will give you complete satisfaction.

Please read carefully the *Installation Guide*, which contains all the necessary information and describes all you need to know about the installation of the UPS.
Thank you for choosing ***GE*** !

⚠	**START UP AND COMMISSIONING** **A GE GLOBAL SERVICES FIELD ENGINEER must perform start-up and commissioning of the UPS.** **Please Contact GE. GLOBAL SERVICES at least two weeks prior to schedule start-up and commissioning at 1-800-637-1738, or by E-mail at pqservice@ge.com .**

GE Consumer & Industrial SA
General Electric Company
CH – 6595 Riazzino (Locarno)
Switzerland
www.gepowerquality.com

Distributed in the USA by:

GE Digital Energy
Power Quality
2501 Pecan Street
Bonham, TX 75418
T: +1 800-637-1738
F: +1 903-640-0533
E: GEPQSales@ge.com
http://www.gedigitalenergy.com/ups

Your service contact:

Preface

Congratulations on your choice of a *SG Series* Uninterruptible Power Supply (UPS).
It will help eliminate load disturbances due to unexpected power problem.

This manual describes how to prepare the installation site, and it provides weight and dimensions and procedures for moving, installing and connecting the UPS.

Please refer to the *Operating Manual*, which describes the function of the UPS module, the purpose and location of the switches, the meaning of the system events related to the front panel indication, and provides procedures for starting and stopping the equipment.

While every care has been taken to ensure the completeness and accuracy of this manual, *GE* assumes no responsibility or liability for any losses or damages resulting from the use of the information contained in this document.

WARNING!
SG Series 400 & 500 is a product that needs to be installed by a licensed and knowledgeable contractor.

We recommend that this manual be kept next to the UPS for future references.
If any problems are encountered with the procedures contained in this manual, please contact your *Service Center* before you proceed.

This document shall not be copied or reproduced without the permission of *GE*.

Some of the information contained in this manual may be changed without notice to reflect technical improvements.

Safety instructions

Read the safety instructions contained on the following pages carefully before the installation of the UPS, options and battery system.

Pay attention to the rectangular boxes included in the text:
They contain important information and warning concerning electrical connections and personnel safety.

RPA
Redundant Parallel Architecture

Parallel version secured with RPA

When included in the text, this symbol refers to operation needed only for parallel system.

Table of contents

Page

1 IMPORTANT SAFETY INSTRUCTIONS 6

2 LAYOUT 9

2.1 LAYOUT *SG Series 400 & 500* 9

3 INSTALLATION 10

3.1 TRANSPORT 10

3.1.1 Dimensions and weight 10

3.2 DELIVERY 11

3.3 STORAGE 11

3.3.1 Storage of the UPS 11

3.3.2 Storage of battery 11

3.4 PLACE OF INSTALLATION 12

3.4.1 UPS location 12

3.4.2 Battery location 14

3.5 VENTILATION AND COOLING 15

3.6 UNPACKING 16

3.7 ELECTRICAL WIRING 18

3.7.1 Utility input connection 18

3.7.2 Input/output over current protection and wire sizing 19

3.7.3 Battery over current protection and wire sizing 20

3.8 WIRING CONNECTION 22

3.8.1 Power connections 22

3.8.2 Power connection with common input utility 24

3.8.3 Power connection dual input utility (option) 26

3.8.4 Battery and External Battery Breaker connection 29

3.8.5 Interface to External Bypass for single unit 30

3.8.6 Connections to External Bypass switch in case of RPA Parallel System 30

3.8.7 Setup for *SG Series 400 & 500* intended to be operated in eBoost™ Operation Mode 31

3.9 RPA PARALLEL SYSTEM CONNECTION 32

3.9.1 Power wiring of parallel units 32

3.9.2 Parallel control bus connection 33

3.9.3 Control bus cable location 35

4 CUSTOMER INTERFACE 37

4.1 CUSTOMER INTERFACE 37

4.1.1 Serial Port *J3* 38

4.1.2 Output free potential contacts 38

4.1.3 Programmable input free contacts 39

4.1.4 Gen Set Signaling (GEN ON) 39

4.1.5 AUX external Maintenance Bypass 39

4.1.6 Auxiliary Power Supply (APS) 24Vdc and Battery Breaker Release 39

4.1.7 EPO (Emergency Power Off) Input contact 40

5 NOTES 41

5.1 NOTES FORM 41

1 IMPORTANT SAFETY INSTRUCTIONS

SAVE THESE INSTRUCTIONS

This manual contains important instructions for models ***SG Series 400 & 500*** that should be followed during installation and maintenance of the UPS and battery.

GENERAL

- Move the UPS in an upright position in its original package to the final destination room.
  To lift the cabinets, use a forklift or lifting belts with spreader bars.
- Check for sufficient floor and elevator loading capacity.
- Check the integrity of the UPS equipment carefully.
  If you notice visible damage, do not install or start the UPS.
  Contact the nearest *Service Center* immediately.
- WARNING! *RISK OF ELECTRICAL SHOCK*:
  Do not remove covers, there are no user serviceable parts inside.
- After switching off takes 5 minutes for the DC capacitors to discharge because a lethally high voltage remains at the terminals of the electrolytic capacitors.
- All maintenance and service work should be performed by qualified service personnel.
  The UPS contains its own energy source (battery).
- The field-wiring outlets may be electrically live, even when the UPS is disconnected from the utility.
- Dangerous voltages may be present during battery operation.
- The battery must be disconnected during maintenance or service work.
- This UPS contains potentially hazardous voltages.
- Be aware that the inverter can restart automatically after the utility voltage is restored.

INSTALLATION

- This UPS must be installed and connected only by trained personnel.
- Verify accurately during Commissioning and Maintenance of the UPS, for the following:
  Damaged components, squeezed wires and cables, or not correctly inserted plugs.
- After removing the sidewalls of the UPS, make sure that all earth connections when reassembling, are correctly reattached.
- This UPS is intended for use in a controlled indoor environment free of conductive contaminants and protected against animals intrusion.
- WARNING! HIGH EARTH LEAKAGE CURRENT:
  Earth connection is essential before connecting to AC input!
- Switching OFF the unit does not isolate the UPS from the utility.
- Do not install the UPS in an excessively humid environment or near water.
- Avoid spilling liquids on or dropping any foreign object into the UPS.
- The unit must be placed in a sufficiently ventilated area; the ambient temperature should not exceed 104°F (40°C).
- Optimal battery life is obtained if the ambient temperature does not exceed 77°F (25°C).
- It is important that air can move freely around and through the unit. Do not block the air vents.
- Avoid locations in direct sunlight or near heat sources.

STORAGE

- Store the UPS in a dry location; storage temperature must be within -13°F (-25°C) to 131°F (+55°C).
- The optimal temperature for Battery storage is 68°F (20°C) to 77°F (25°C) and shall never exceed the range -4°F (-20°C) to 104°F (40°C).
- If the unit is stored for a period exceeding 3 months, the battery must be recharged periodically (time depending on storage temperature).

BATTERY

- The battery-voltage is dangerous for person's safety.
- When replacing the battery, use the same cells number, voltage (V), capacity (Ah).
  All the battery used, shall be of the same manufacturer and date of production.
- Proper disposal or recycling of the battery is required.
  Refer to your local codes for disposal requirements.
- Never dispose of battery in a fire: they may explode.
- Do not open or mutilate battery: their contents (electrolyte) may be extremely toxic.
  If exposed to electrolyte, wash immediately with plenty of water.
- Avoid charging in a sealed container.
- Never short-circuit the batteries.
  When working with batteries, remove watches, rings or other metal objects, and only use insulated tools.
- In case of air shipment, the cables +/- going to the battery fuses/terminals shall be disconnected and isolated.

Safety instructions when working with battery

	EXTERNAL BATTERY MUST BE INSTALLED AND CONNECTED TO THE UPS BY QUALIFIED SERVICE PERSONNEL ONLY. INSTALLATION PERSONNEL MUST READ THIS ENTIRE SECTION BEFORE HANDLING THE UPS AND BATTERY.

DANGER!

Full voltage and current are always present at the battery terminals.
The battery used in this system can provide dangerous voltages, extremely high currents and a risk of electric shock.
If the terminals are shorted together or to ground they may cause severe injury.
You must be extremely careful to avoid electric shock and burns caused by contacting battery terminals or shorting terminals during battery installation.
Do not touch uninsulated battery terminals.

A qualified service person, who is familiar with battery systems and required precautions, must install and service the battery.
The installation must conform to national and local codes.
Keep unauthorized personnel away from the battery.

The qualified service person must take these precautions:

1. Wear protective clothing, such as rubber gloves and boots and protective eye wear
   Batteries contain caustic acids and toxic materials and can rupture or leak if mistreated.
   Remove rings and metal wristwatches or other metal objects and jewelry.
   Do not carry metal objects in your pockets where the objects can fall into the battery cabinet.
2. Tools must have insulated handles and must be insulated so that they will not short battery terminals.
   Do not allow a tool to short between individual or separate battery terminals or to the cabinet or rack.
   Do not lay tools or metal parts on top of the battery, and do not lay them where they could fall onto the battery or into the cabinet.
3. Install the battery as shown on the drawing provided with the battery.
   When connecting cables, never allow a cable to short across a battery's terminals, the string of battery, or to the cabinet or rack.
4. Align the cables on the battery terminals so that the cable lug will not contact any part of the cabinet or rack, even if the battery is moved.
   Keep the cable away from any sharp metal edges.
5. Install the battery cables in such a way that the UPS or battery cabinet doors cannot pinch them.
6. Do not connect the battery terminal to Ground.
   If any battery terminal is inadvertently grounded, remove the source of the ground.
   Contacting any part of a grounded battery can cause a risk of electric shock.
7. To reduce the risk of fire or electric shock, install the battery in a temperature and humidity controlled indoor area, free of contaminants.
8. Battery system chassis ground (earth) must be connected to the UPS chassis ground (earth).
   If you use conduits, this ground conductor must be routed in the same conduit as the battery conductors.
9. Where conductors may be exposed to physical damage, protect the conductors in accordance with all applicable codes.
10. If you are replacing the battery or repairing battery connections, shut OFF the UPS and remove the battery fuses.

Safety symbols and warnings

Safety warnings

The text of this manual contains some warnings to avoid risk to the persons and to avoid damages to the UPS system and the supplied critical loads.

The non-observance of the warnings reminding hazardous situations could result in human injury and equipment damages.

Please pay attention to the meaning of the following warnings and symbols.

Throughout this manual the following symbols are defined:

	WARNING, if instruction is not followed injury or serious equipment damage may occur!
	CAUTION, internal parts have dangerous voltage present. **Risk of electric shock!**
	PE (Earth) – GND (Ground) **PROTECTIVE GROUNDING TERMINAL:** **A terminal which must be connected to earth ground prior to making any other connection to the equipment.**
	A terminal to which or from which an alternating (sine wave) current or voltage may be applied or supplied.
	A terminal to which or from which a direct current or voltage may be applied or supplied.
	This symbol indicated the word "phase".
	This symbol indicates the principal on/off switch in the on position.
	This symbol indicates the principal on/off switch in the off position.

2 LAYOUT

2.1 LAYOUT *SG Series 400 & 500*

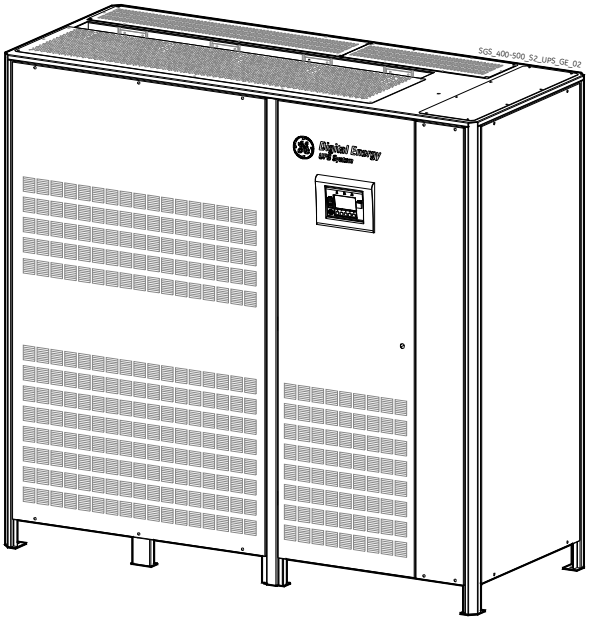

Fig. 2.1-1 SG Series 400 & 500 general view

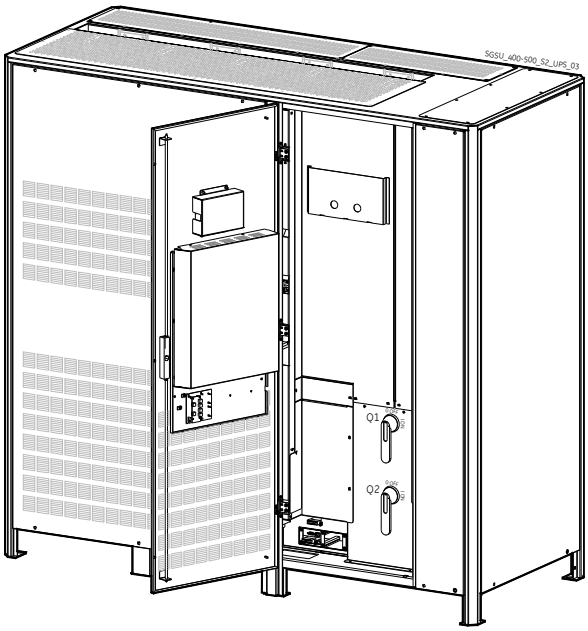

Fig. 2.1-2 SG Series 400 & 500 general view with open doors

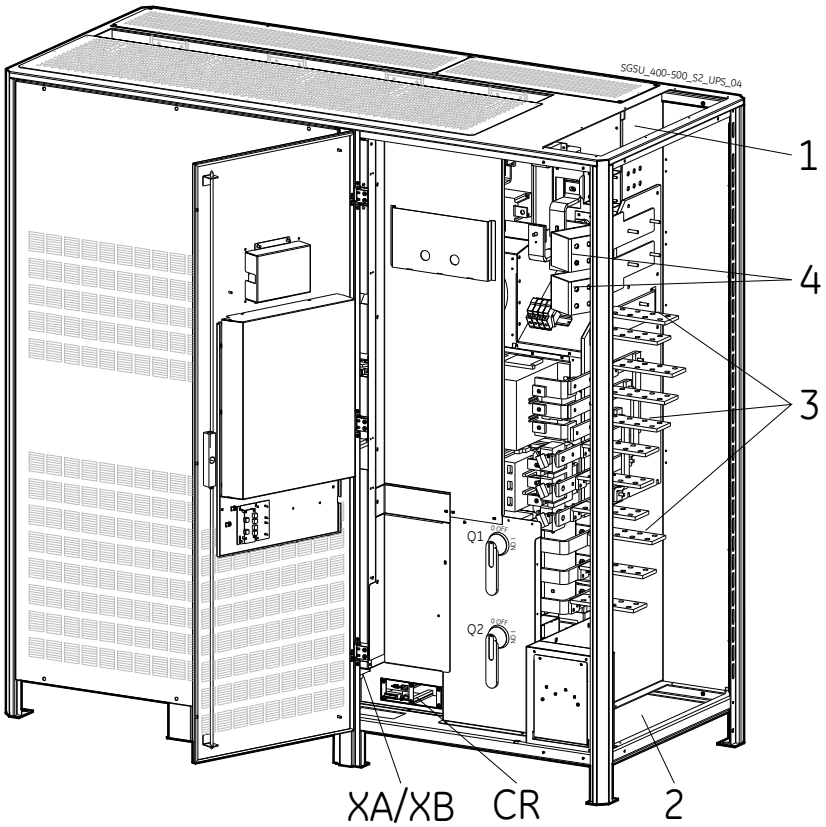

Fig. 2.1-3 SG Series 400 & 500 general view with optional 5th harmonic filter and removed protection panels

1 Opening for top cable entry (*)

2 Opening for bottom cable entry(*)

3 Bus bars for Utility input and Load output

4 Bus bars for external Battery connection

CR Connectivity Rack

XA Terminals for 24Vdc Auxiliary Power Supply connection

XB Terminals for EPO connection

*****) Remove this panel or provide means to capture metal filings from cutting conduit entry holes.

3 INSTALLATION

3.1 TRANSPORT

Forklift

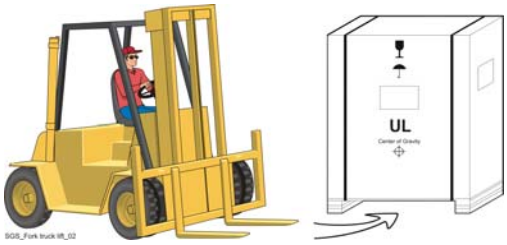

Crane

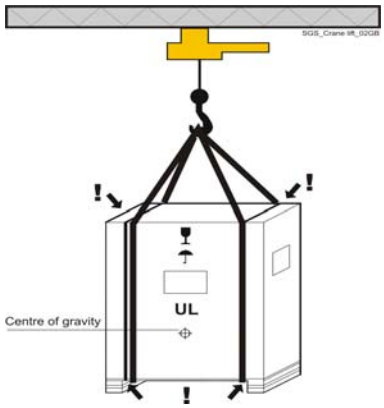

Fig. 3.1-1 UPS cabinets moving

Transport UPS only in upright position!

The UPS is packaged on a pallet suitable for handling with a forklift.

Pay attention to the center of gravity.

The UPS must be moved in **upright position**.
Do not tilt cabinets **more than +/- 10°** during handling.

Move the UPS in it's original package to the final destination site.

Do not stack other packages on top: This could damage the UPS.

If the UPS must be lifted by crane, use suitable lifting straps and spreader bars.
Note of the center of gravity marked on the package.
Take all necessary precautions to avoid damage to the cabinet while hoisting the UPS.

	NOTE ! **Check for sufficient floor and elevator loading capacity.**

3.1.1 Dimensions and weight

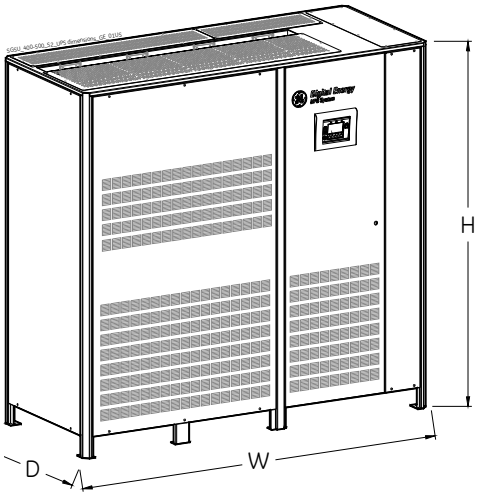

Fig. 3.1.1-1 UPS cabinet dimensions

Dimensions *SG Series 400 & 500* (W x D x H)
80.71 x 33.47 x 76.78 inches 2,050 x 850 x 1,950 mm

Weight *SG Series 400 & 500*		
UPS rating	**Weight** lbs / kg	**Floor loading** lbs/sq.ft - kg/m²
SG Series 400 & 500	5,226 / 2,370	279 / 1,359

P.S.: Weights including the 5th harmonic filter.

3.2 DELIVERY

When delivered, inspect the **package integrity** and **the physical conditions of the cabinets** carefully.

In case of any damage sustained during transport, immediately inform the carrier and contact your local ***Service Center***.

A **detailed report** of the damage is necessary for any insurance claim.

⚠	NOTE ! **A DAMAGED UPS MUST NEVER BE INSTALLED OR CONNECTED TO UTILITY OR BATTERY!**

3.3 STORAGE

3.3.1 Storage of the UPS

The UPS is carefully packed for transport and storage so that it is in perfect condition when installed.
Never leave a UPS outside the building and don't store other packages on the top of the UPS.

It is advisable to store the UPS in its original package in a dry, dust-free room, away from chemical substances, and with a temperature range not exceeding **-13°F** (-25°C) to **131°F** (55°C).
In case the battery is included please refer to *Section 3.3.2*.

Some important functions of the UPS, such as the customized functions, are defined by parameters stored in a RAM memory.
A small backup battery located on the *Control Unit board* supplies the *RAM*.
If the storage time of the UPS exceeds **1 year**, these functions **should be verified** by an authorized *Service Center* before putting the UPS into operation.

3.3.2 Storage of battery

When the delivery includes a maintenance free battery, keep in mind that they are subject to self-discharge and therefore you must recharge the battery.

The storage time without battery recharge depends on the temperature of the storage site.

The optimal temperature for *Battery* storage is **68°F** (20°C) to **77°F** (25°C) and shall never exceed the range **-4°F** (-20°C) to **104°F** (40°C).

Recharge stored maintenance free battery every:
6 months when the storage temperature is 68°F (20°C)
3 months when the storage temperature is 86°F (30°C)
2 months when the storage temperature is 95°F (35°C)

3.4 PLACE OF INSTALLATION

3.4.1 UPS location

⚠	**WARNING !** **A QUALIFIED ELECTRICAL CONTRACTOR must carry out the installation and cabling of the UPS.** **If optional cabinets and accessories are included with the UPS, please refer to those accompanying manuals for installation and operating instructions.**

It is important to have a clean, dust-free environment provided with proper ventilation and air-conditioning to keep the ambient temperature within the specified operating range.

The recommended air inlet temperature is from **68°F** (20°C) to **77°F** (25°C) (**max. 104°F / 40°C**).
Refer to *Section 3.5*.

Check for sufficient floor load capacity before installing the UPS and the *Battery*.
Refer to *Section 3.1.1*.

For *Battery* installation follow the local codes and the recommendation of the battery supplier.

⚠	**NOTE !** **Temperature is very important for valve-regulated batteries (maintenance free).** **Operation at temperatures higher than 77°F (25°C) will reduce battery life.**

The ***SG Series 400 & 500*** UPS can radiate radio frequency energy.
Although some RFI filtering is inherent to the UPS there is no guarantee that the UPS will not influence sensitive devices such as cameras and monitors that are positioned close by.
If interference is expected, the UPS should be moved away from the sensitive equipment.

A single-phase power outlet (120Vac) should be provided near the UPS for connection of power tools, test equipment or connectivity devices. This outlet must be grounded.

Positioning of the UPS *SG Series 400 & 500*

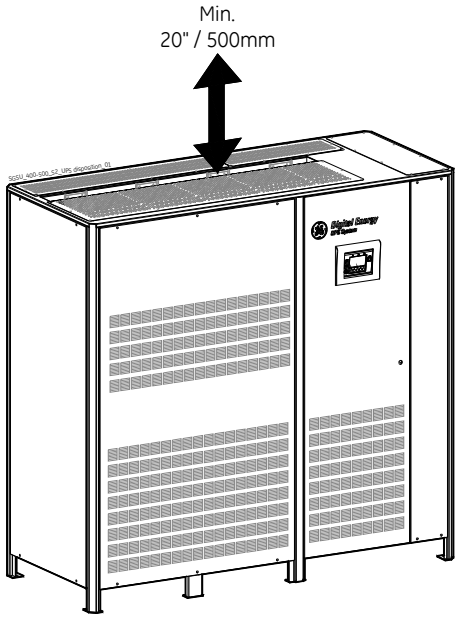

Fig. 3.4.1-1 SG Series 400 & 500 clearances

The rear panel of the UPS may be mounted flush to a wall or other structure.

Clearance around the front of the unit should be sufficient to enable free passage of personnel with the doors fully open, and to allow sufficient airflow to the door vents.
Check section 110-26(A) of the NEC code for specific requirements.

Recommended minimum clearance between ceiling and top of the UPS should be **20" (500 mm)** for proper cooling air exhaust.

In case of additional cabinets (external Batteries or input, output transformers) these can be placed on either side of the cabinet.

Openings for input and output cable connections

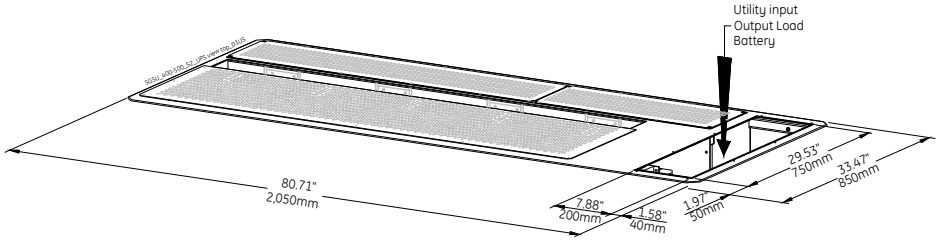

Fig. 3.4.1-2 Opening on top of the cabinet for input and output cables

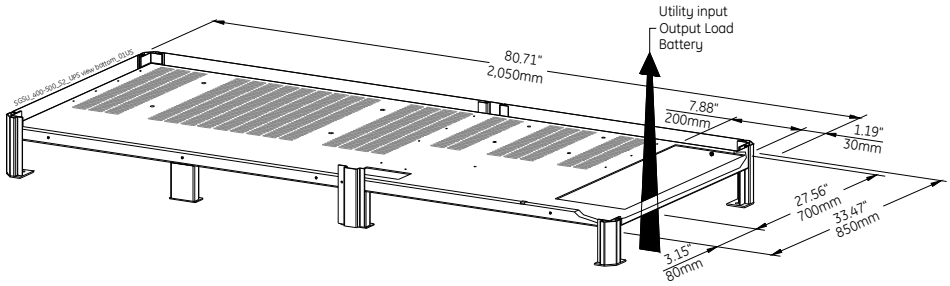

Fig. 3.4.1-3 Opening on the bottom of the cabinet for input and output cables

SG Series 400 & 500 openings are provided on the top and the bottom of the UPS for the connection of input and output cables.

Pay attention to the position of these openings, when choosing the placement of the UPS. These openings are covered with a protective plate.

Fixing of the UPS cabinet on the floor

The UPS cabinet is free standing and normally does not require to be bolted to the floor.
The UPS cabinet can be fixed however to the floor by bolting it with the supporting blocks to the floor. See *Fig. 3.4.1-4*.

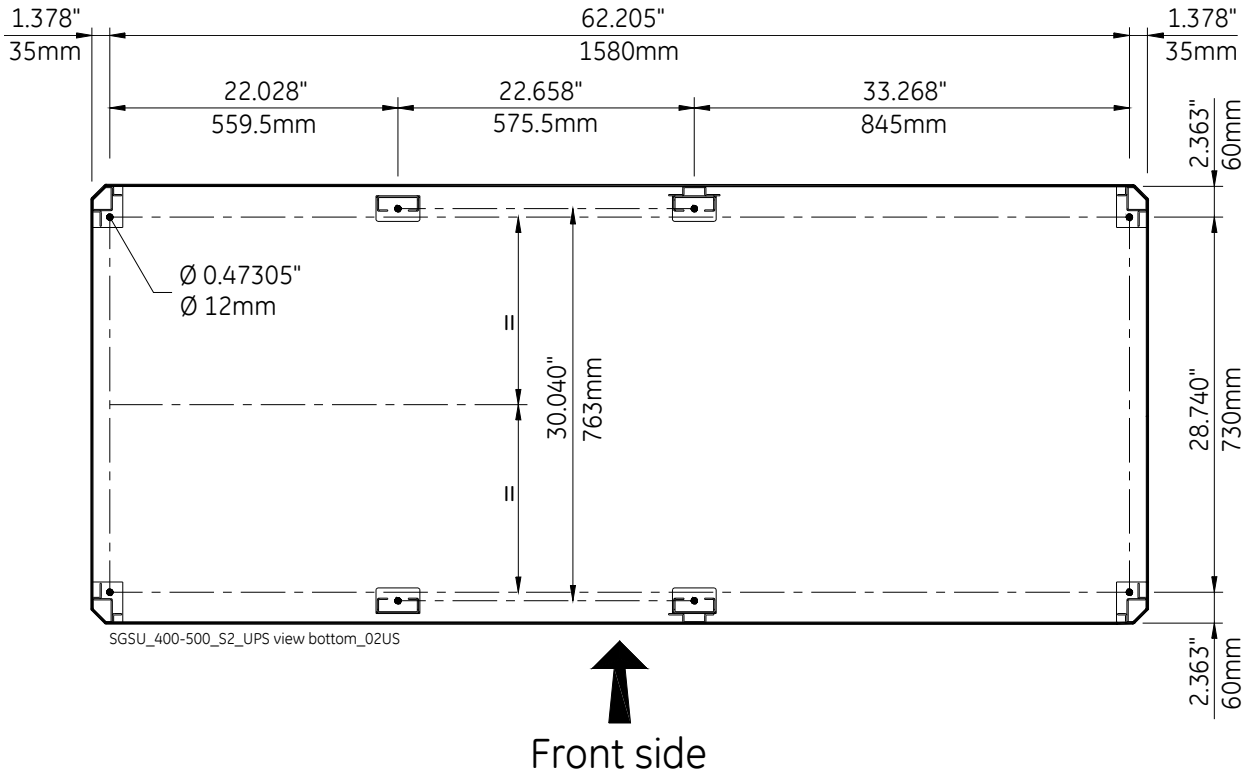

Fig. 3.4.1-4 Fixing of the UPS cabinet on the floor

RPA

Redundant Parallel Architecture

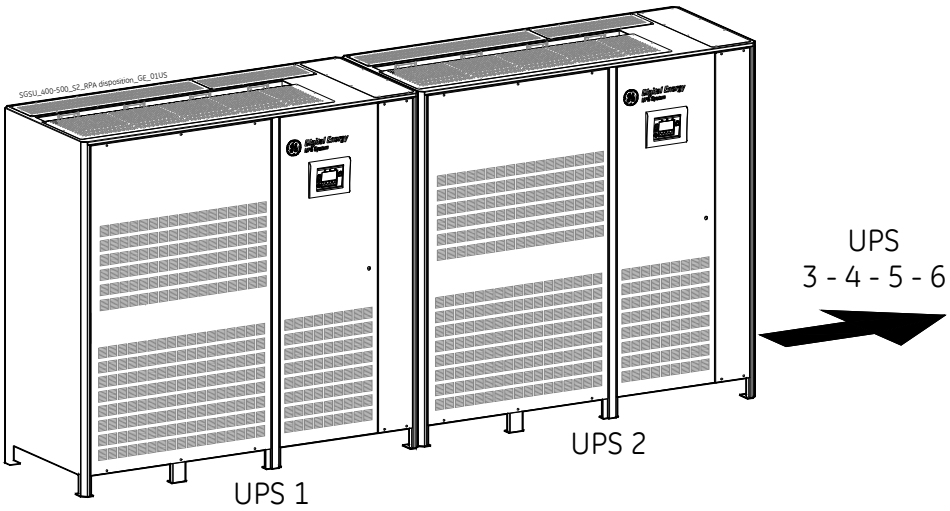

Fig. 3.4.1-5 RPA system disposition

In case of parallel system, try to place the UPS modules in sequence of their numbers (marked on the packing).

If the units are positioned "*side by side*", the side panels must be mounted on all units.

3.4.2 Battery location

Batteries require a well-ventilated room with controlled temperature to obtain reliable operation.

The battery can be install immediately adjacent to the UPS (left or right side) or remotely from the UPS. If the battery is installed remotely from the UPS, a wall mounted DC disconnect device must be installed within line-of-site to both the UPS and the battery.

The optimal room temperature for *Battery* storage is **68°F** (20°C) to **77°F** (25°C) and shall never exceed the range **-4°F** (-20°C) to **104°F** (40°C).

The life of valve-regulated batteries will be reduced by 50% for each additional **18°F** (10°C) that the battery ambient temperature is above **77°F** (25°C).

The battery system associated with larger UPS is usually either rack mounted or installed in multiple battery cabinets.

Installation and assembly must be made according to the local standards and battery system manufacturer's recommendations.

The battery circuit breaker or battery fuse box must be mounted as near as possible to the battery.

NOTE !

Battery installation and connection must be performed by QUALIFIED SERVICE PERSONNEL ONLY.

Read all safety instructions before proceeding with the installation.

3.5 VENTILATION AND COOLING

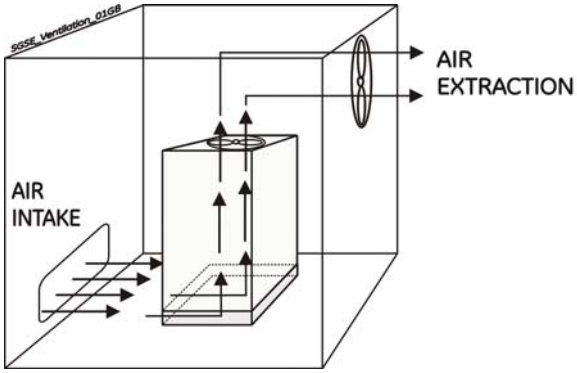

Fig. 3.5-1 Installation on plain floor

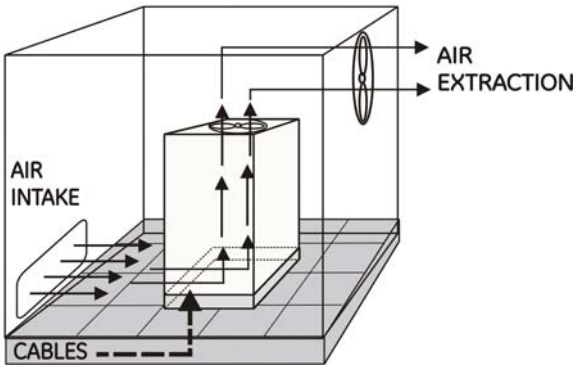

Fig. 3.5-2 Installation on raised floor

The heat produced by the UPS is transferred to the environment by its ventilation.

Air inlets for UPS ventilation are located on the front of the UPS, while air outlets are on top of the cabinet.

A suitable ventilation or cooling system must be installed to extract the heat from the UPS room.

⚠	**NOTE !** **Do not put anything on the top of the cabinet.**

Air filtration systems could be required when the UPS operates in a dirty environment.
Contact your ***Dealer*** or the nearest ***Service Center*** for appropriate solutions.

In order to prevent overheating of the UPS, the available air intake flow rate must exceed the total air exhaust flow rate requirement of the UPS system.

The below table indicates the heat dissipation at full load at **PF = 0.9** lag. and charged battery, up to **3,280 ft** (1,000 m) altitude, for cooling air **77°F** (25°C) to **86°F** (30°C).

UPS rating with options	Losses		Cooling air flow	
	BTU / hr	kW	CFM	m³ / h
SG Series 400 with 5th filter	78,499	23.0	3,949	6,709
SG Series 400 with 5th & 11th filter	79,864	23.4	4,018	6,825
SG Series 400 in eBoost™ Operation Mode	13,652	4.0	687	1,167
SG Series 500 with 5th filter	99,659	29.2	5,013	8,517
SG Series 500 with 5th & 11th filter	101,366	29.7	5,099	8,663
SG Series 500 in eBoost™ Operation Mode	17,065	5.0	859	1,459

3.6 UNPACKING

The UPS and *Battery Cabinets* may be shipped packaged in carton boxes or in wooden crates (if requested).

Move the cabinets as close as possible to the final location before removing from the pallet.

If delivered in a wooden crate, remove the cabinet from the pallet with care, because of the heavy weight of the equipment.

White color = without any anomaly
Red color = anomaly evidence

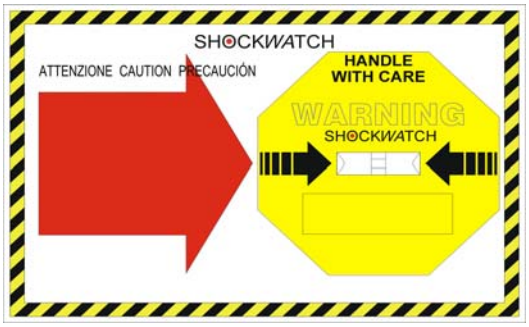

Fig. 3.6-1 ShockWatch device

Fig. 3.6-2 TiltWatch device

The package of the *SG Series 400 & 500* is equipped with *ShockWatch* (indicator for shock), and *TiltWatch* (indicator for overthrow) on the outside.

These devices indicate an eventual shock or overthrow during transport.

Whenever these devices show a possible anomaly, the UPS shall not be commissioned before consulting a *"Service Center"*.

NOTE !

Take care not to damage the UPS when moving by forklift.

A damaged UPS must never be installed or connected to *Utility* or *Battery!*

In case of any damage sustained during the transport, immediately inform the shipping agent!

A detailed report of the damage is necessary for any indemnity claim.

Transport fastening to remove

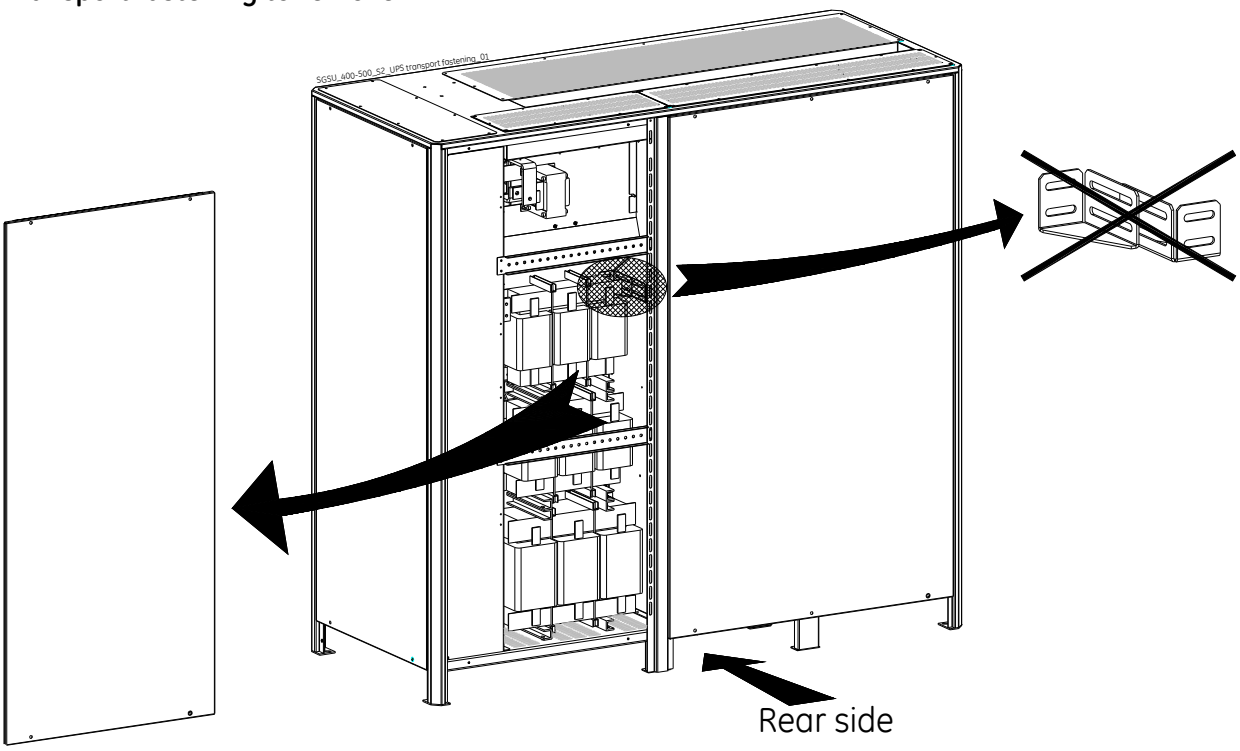

Fig. 3.6-3 Transport fastening to remove

The chokes fitted in the UPS cabinet are supported both at the chassis.

These supports must be removed before placing the cabinet in the final location.

These supports are yellow and are indicated with an appropriate symbol on the assembly layout drawing (see *Fig. 3.6-1)*.

RPA
Redundant Parallel Architecture

For parallel systems, the delivery also includes the bus control cables for interconnecting the UPS modules.

Packing material recycling

GE, in compliance with environment protection, use only environmentally friendly material.

UPS packing materials must be recycled in compliance with all applicable regulations.

3.7 ELECTRICAL WIRING

⚠	**WARNING !** **UPS installation and connection must be performed by QUALIFIED SERVICE PERSONNEL ONLY.** **It is the responsibility of the installation technician to ensure that all local and national electric codes are adhered to.**

3.7.1 Utility input connection

⚠	**NOTE !** **Ensure that the AC and DC external isolators are OFF and locked out to prevent their inadvertent operation.** **Do not apply power to the equipment prior to the commissioning by a QUALIFIED SERVICE ENGINEER.** **Before any other input connection, connect and check the grounding wire.**

The UPS has available input terminations for the *Rectifier* and *Bypass*.
The unit may be powered from a *common input* source or *dual input* (option) sources if desired.

Common Input Rectifier & Bypass	
The **same power source** is to be used for both *Bypass Supply* and *Rectifier Input* (input ***F3***). Bear in mind that when the *Utility Fuses* are opened there is a supply failure to the *Rectifier* as well as to the *Bypass* and *Manual Bypass*.	
⚠	**In this case, the interconnection links *BR1*, *BR2* and *BR3* on the input terminals or bus bars MUST REMAIN CONNECTED. See *Fig. 3.8.3-3*.**

Dual Input Configuration Rectifier & Bypass (option)	
The *Bypass* and *Rectifier* inputs are to be powered from different *Utility supplies* (***F1*** and ***F2*** inputs). In this case, when the *Rectifier Input Fuses* are opened, the *Bypass* and the *Manual Bypass* are supplied by the other source.	
⚠	**In this case, REMOVE the interconnection links *BR1*, *BR2* and *BR3* on the input terminals or bus bars. See *Fig. 3.8.3-3*.**

Dual Input Configuration Rectifier & Bypass (option)

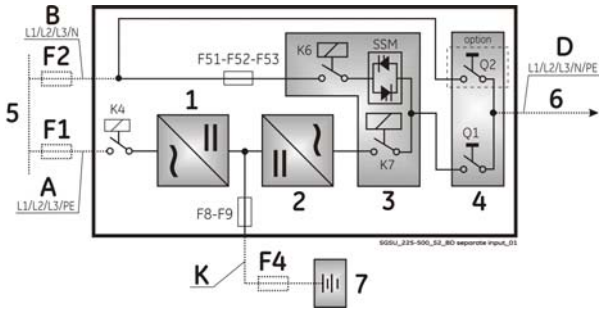

Fig. 3.7.1-1 Dual Input Configuration Rectifier & Bypass (option)

Common Input Rectifier & Bypass

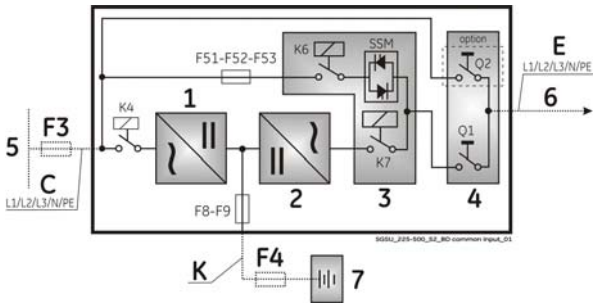

Fig. 3.7.1-2 Common Input Rectifier & Bypass

1 = Rectifier	3 = Automatic Bypass	6 = Load	7 = Battery
2 = Inverter	4 = Manual Bypass Q2 (option)	5 = Utility input	

3.7.2 Input/output over current protection and wire sizing

The cabling of the UPS system has to be sized according to the UPS power rating.
Sizing of circuit breakers, fuses and cables for *Input Utility*, *Output Load* and *Battery* must meet the requirements of local and national electrical codes.

Before connecting the UPS, verify that the ***Utility Voltage and Frequency***, the ***Output Load Voltage and Frequency*** and ***Battery Data*** (cells number, floating voltage, autonomy) are according to the required specifications.

Output load configuration may be such that one phase may carry a load current at 100% of that phases maximum current rating while the other two phases run at 0% or any combination in between.
Ensure that the load does not consist of any equipment that may require high starting currents such as electric motors, laser printers, etc.
This may cause the UPS to occasionally go into *Bypass* due to overload conditions

To choose the correct input fuses or circuit breaker, consider the available **short-circuit current** of the system up-stream.
Choose the correct fuse or breaker using current data shown in the chart and the appropriate NEC code.

The ratings indicated in the following chart do not consider any **line voltage drop**.

In case of optional input transformer the input protective devices should be sized to allow the transformer magnetization inrush current.

Caution when using **four-pole circuit breakers** as protection.
A potential problem exists for situations with **non-linear loads**:
The neutral current could be greater than the phase currents.

The three-phase *Utility* power supply must be symmetrical with respect to ground, due to the existence of voltage surge protection devices inside the UPS.

⚠	NOTE ! **If you use ELCB breaker (Earth Limiting Circuit Breaker) to protect the input connections, consider the high leakage current generated by the noise suppression capacitors.** **If these ELCB breakers are strictly necessary, we suggest using the largest type suitable for non-linear current and for delayed operations.**

To ensure coordination when the UPS is configured for *Separate Bypass* and *Rectifier Inputs*, special care must be taken in choosing the **fuse or circuit breaker ratings** installed in the output distribution circuits.
Protective devices on the output of the UPS should be coordinated with the *Bypass Input* circuit protection.
Due to the relatively low short circuit capability of the UPS inverter, a short circuit in the load will cause an immediate transfer to *Bypass*.

The largest fuse or circuit breaker in the output distribution should be rated at no more than 60% of the rating of the protective device supplying the *Bypass* line.

If circuit selectivity is required while the load is fed from the inverter (*Bypass Utility* not available), the largest fuse or circuit breaker should be rated at no more than 20% of the UPS output current rating.

3.7.3 Battery over current protection and wire sizing

NOTE !

- Please read the safety precautions at the front of this guide carefully, and thoroughly review the battery manufacturers installation and maintenance manual before connecting the batteries to the UPS.
- The remote rack mounted batteries are to be used then DC over current protection must be provided by others.
- Choose an appropriate DC fuse or circuit breaker using the current data in the chart below.
- Minimum battery cable requirement is based on the current data below.
- The maximum available fault current from the battery supply is: 20kA.
- The minimum breaker voltage rating is 540V

The AC values below are current ratings per phase.
These maximum and nominal ratings should be considered when choosing the appropriate AC over current protection device.
NEC (National Electric Code) Section 210-20 a rules must be applied.
DC current rating is the nominal battery discharge current which the UPS allows.
(See *Fig. 3.7.1-1* and *3.7.1.2*)

UPS rating	*AC Input Rectifier*		*AC Input Bypass*	*AC Input*		*DC Input*
	F1		F2	F3		F4
	Nom.	Max.		Nom.	Max.	
SG Series 400	512 A	615 A	481 A	512 A	615 A	702 A
SG Series 500	617 A	708 A	600 A	617 A	708 A	960 A

Size of Branch Circuit Over Current Protection - All Models: - "CAUTION - To reduce the risk of fire, only connect UPS to a circuit provided with (See below) maximum amperes branch circuit over current protection in accordance with the NEC (National Electric Code), NSI / NFPA 70

UPS rating	*AC Input Rectifier*	*AC Input Bypass*	*AC Input*	*DC Input*
	F1	F2	F3	F4
SG Series 400	800 A	700 A	800 A	1,000 A
SG Series 500	1,000 A	800 A	1,000 A	1,200 A

WIRING

Wire sizing according to
NEC Section 210-20 (a) Table 310-16
Use 75°C (167°F) copper wire

Wiring requirements:

AC INPUT RECTIFIER:	3-Phase, 3 wire plus Ground
AC INPUT BYPASS:	3-Phase, 4 wire plus Ground
AC OUTPUT:	3-Phase, 4 wire plus Ground
DC INPUT:	2 wire (positive and negative) plus Ground

Maximum recommended cable size

UPS rating	Rectifier Input	Bypass Input	DC Input	AC Output	GND
SG Series 400 *SG Series 500*	4x500 kcmil	4x500 kcmil	4x600 kcmil	4x500 kcmil	3x500 kcmil

NEC SECTION 210-20 (a)

Table 310-16. Allowable Ampacities of Insulated Conductors Rated O Through 2000 Volts, 60°C Trough 90°C (140°F Trough 194°F) Not More than Three Current-Carrying Conductors in Raceway, Cable, or Earth (Directly Buried), Based on Ambient Temperature of 30°C (86°F).

Temperature Rating of Conductor (See table 310-13)						
Size	60°C (140°F)	75°C (167°F)	90°C (194°F)	60°C (140°F)	75°C (167°F)	90°C (194°F)
AWG or kcmil	Types TW, UF	Types FEPW, RH, RHW, THHW, THW, THWN, XHHW, USE, ZW	Types TBS, SA, SIS, FEP, FEPB, MI, RHH, RHW-2, THHN, THHW, THW-2, THWN-2, USE-2, XHH, XHHW, XHHW-2,ZW-2	Types TW, UF	Types RH, RHW, THHW, THW, THWN, XHHW, USE	Types TBS, SA, SIS, THHN, THHW, THW-2, THWN-2, RHH, RHW-2, USE-2, XHH, XHHW, XHHW-2, ZW-2
	COPPER			ALUMINIUM or COPPER-CLAD ALUMINIUM		
18	---	---	14	---	---	---
16	---	---	18	---	---	---
14	20	20	25	---	---	---
12	25	25	30	20	20	25
10	30	35	40	25	30	35
8	40	50	55	30	40	45
6	55	65	75	40	50	60
4	70	85	95	55	65	75
3	85	100	110	65	75	85
2	95	115	130	75	90	100
1	110	130	150	85	100	115
1/0	125	150	170	100	120	135
2/0	145	175	195	115	135	150
3/0	165	200	225	130	155	175
4/0	195	230	260	150	180	205
250	215	255	290	170	205	230
300	240	285	320	190	230	255
350	260	310	350	210	250	280
400	280	335	380	225	270	305
500	320	380	430	260	310	350
600	355	420	475	285	340	385
700	385	460	520	310	375	420
750	400	475	535	320	385	435
800	410	490	555	330	395	450
900	435	520	585	355	425	480
1000	455	545	615	375	445	500
1250	495	590	665	405	485	545
1500	520	625	705	435	520	585
1750	545	650	735	455	545	615
2000	560	665	750	470	560	630
CORRECTION FACTORS						
Ambient Temp. (°C)	For ambient temperatures other than 30°C (86°F), multiply the allowable ampacities shown above by the appropriate factor below					
21 - 25	1.08	1.05	1.04	1.08	1.05	1.04
26 - 30	1.00	1.00	1.00	1.00	1.00	1.00
31 - 35	0.91	0.94	0.96	0.91	0.94	0.96
36 - 40	0.82	0.88	0.91	0.82	0.88	0.91
41 - 45	0.71	0.82	0.87	0.71	0.82	0.87
46 - 50	0.58	0.75	0.82	0.58	0.75	0.82
51 - 55	0.41	0.67	0.76	0.41	0.67	0.76

3.8 WIRING CONNECTION

	WARNING! **UPS installation and connection must be performed by QUALIFIED SERVICE PERSONNEL ONLY.**

3.8.1 Power connections

Input/output and DC connections are provided with terminal blocks.
Please refer to chart for torque specifications.

Carefully read the following recommendations before proceeding:

- Ensure that the AC and DC external isolators are OFF and locked to prevent their inadvertent operation.
- Do not close any external isolators prior the commissioning of the equipment.
- The preferred power cable entry location for installation purposes is from the right side of the UPS, either top or bottom.
  In case of cable entry from the top of the cabinet, remove the cover plate fitted on the roof and provide for a suitable isolated protection cover.
  In case of cable entry from the bottom remove cover plate and perform the same procedure.
- If the UPS is installed in such a way that the accessibility to the right side panel is reduced, field wiring connections can be made from the front side by removing the front right side panel protection cover/panel (E) as indicated in Fig. 3.8.1-1 be advised that installation performed from the front position will give the installer reduced visibility to the terminal lugs.
- The input/output cables must be connected in clockwise phase rotation for both *Bypass* and *Rectifier Input Terminals* if separate, taking care to avoid risk of short circuit between different poles.
- The grounding and neutral connection of the electrical system must be in accordance with local regulations.
- In case of additional cabinets containing batteries, input/ output transformers, etc, their ground terminals must be connected to the UPS main ground terminal.
- Once the power cables have been connected, re-install the internal safety shields and close the cabinets by re-installing all external panels.

Torque Specifications Lugs bolted to Buss Blades Input / Output / Neutral / Battery and GND			
UPS rating	BOLT Size (inches)	BOLT Torque (Lb-in)	BOLT Torque (N-m)
SG Series 400 & 500	1/2	428	48

CAUTION !

Panel "A, B, C and D" should never be removed or replaced with power applied to the UPS.

This panel is in close proximity to 480V live buss bars.

Always disconnect the rectifier, bypass, load and battery sources from the UPS before removing or replacing this panel.

If not serious injury or death could occur!

Access to power wiring terminals for the cable connections.

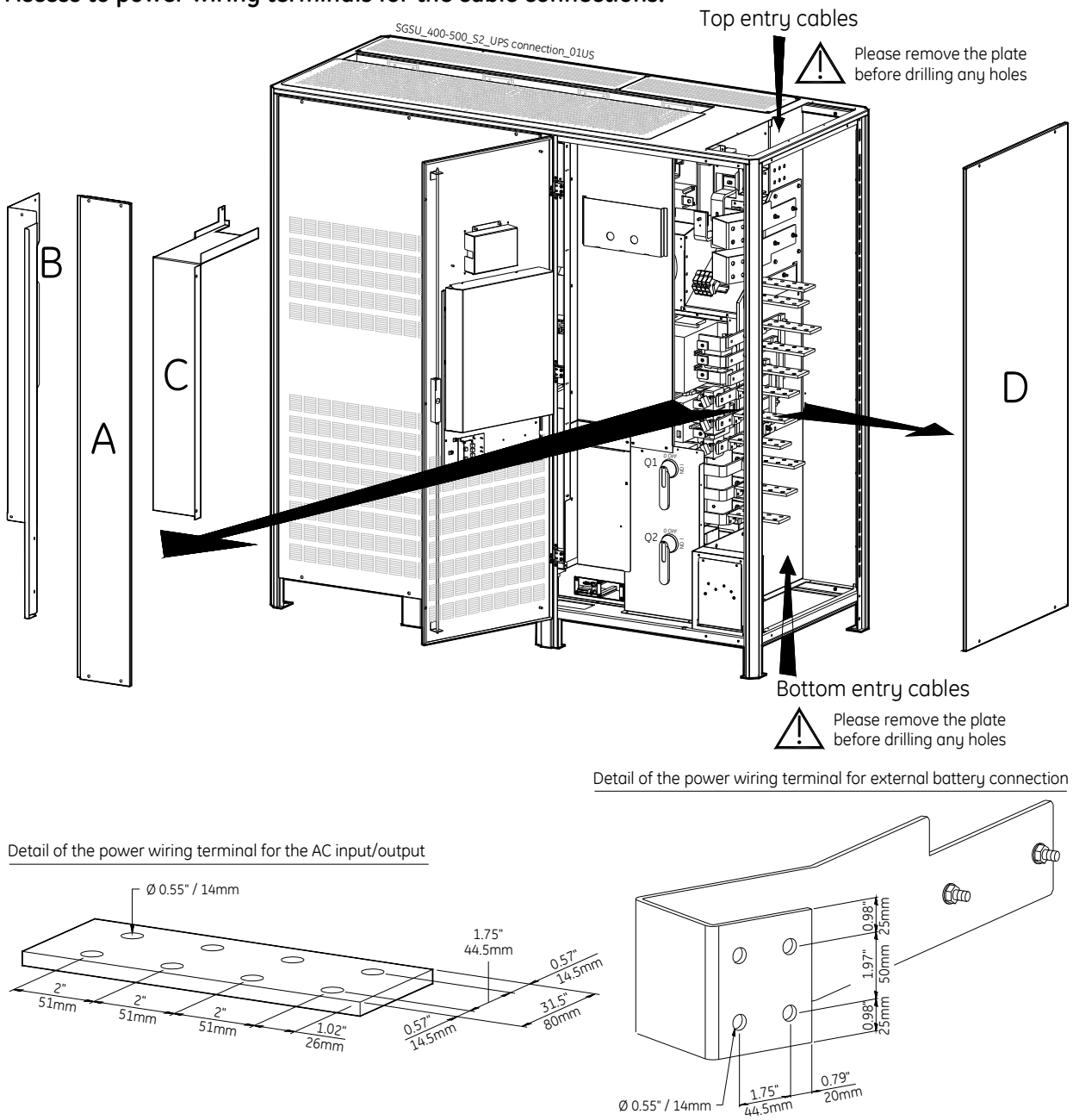

Fig. 3.8.1-1 Access to the input / output connections

To access input, output and *Battery Connections* proceed as follows:

- Remove the protection panel "***A***, ***B*** and ***C***".
- Remove the UPS side panel "***D***".

3.8.2 Power connection with common input utility

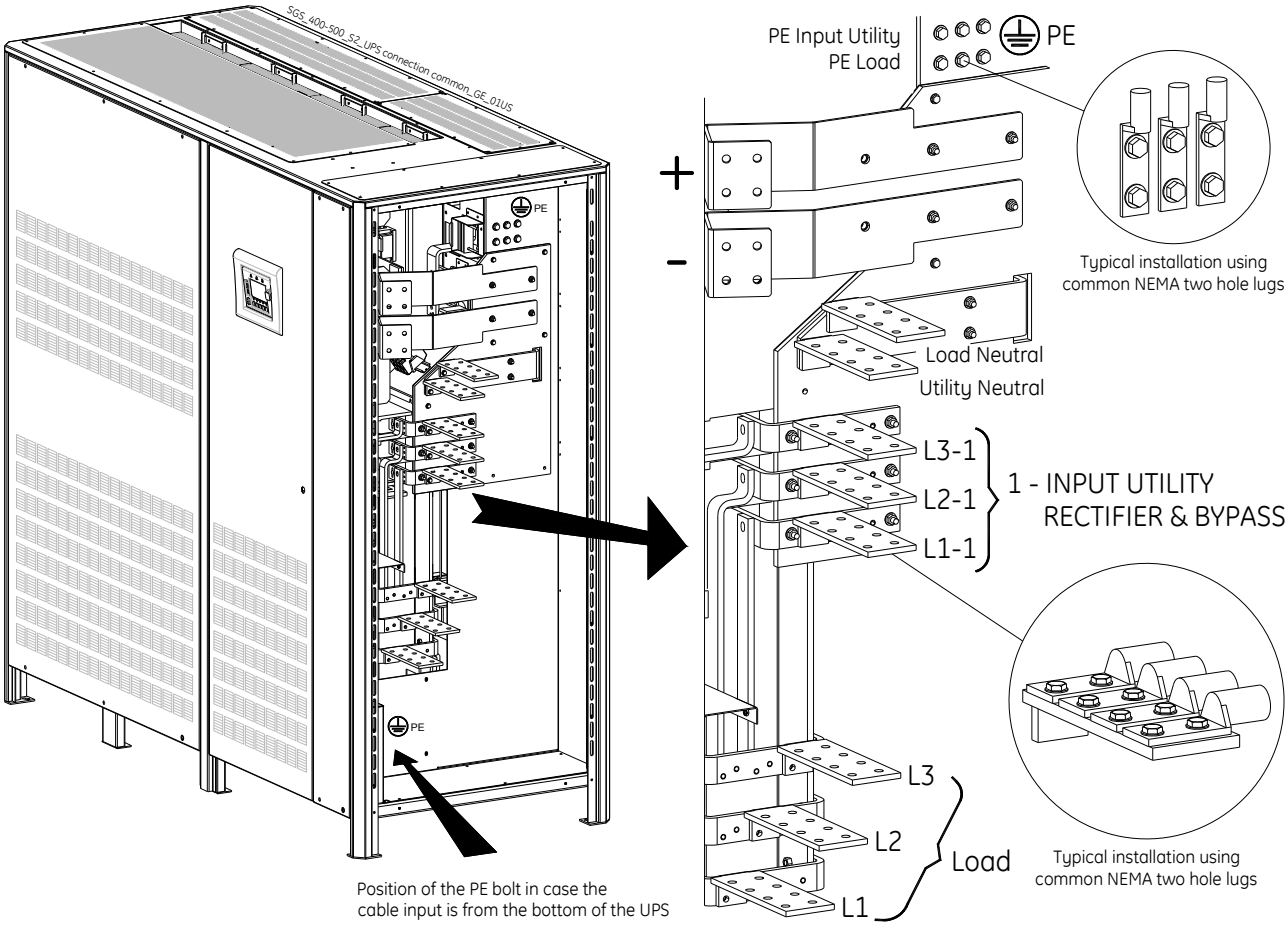

Fig. 3.8.2-1 Power connections Common Input Utility

Use 1/2" bolts for the cable connections on INPUT / OUTPUT power wiring *Bus Bars*.
Cable terminations are to the *Rectifier Input / Output Bus Bars* as shown above.
Connect wire to the *Bus Bars* using appropriate tools and appropriate torque.
Torque specification for two hole lugs on *Bus Bars*: see *Section 3.8.1*.

Common Input Rectifier / Bypass			
L1-1	Rectifier + Bypass Phase A		
L2-1	Rectifier + Bypass Phase B		
L3-1	Rectifier + Bypass Phase C		
N	Utility Neutral	**PE Input Utility**	Ground
⚠	**The interconnection bus bars *BR1*, *BR2* and *BR3* <u>MUST REMAIN CONNECTED</u> (see *Fig. 3.8.3-3*).**		

Output Load					
L1	Load Phase A	**L2**	Load Phase B	**L3**	Load Phase C
N	Load Neutral	**PE Load**	Load Ground		

NOTE !

This UPS is only designed to operate in a wye-configured electrical system with a solidly grounded neutral.
The UPS cannot be operated from a mid-point or end-point grounded delta supply source.

If the *Load* requires a *Neutral*, a *Bypass Source Neutral* MUST BE PROVIDED.
If no *Neutral Connection* is available with the *Bypass Input* (3-wire input + ground) and the *Load* does not require a *Neutral*, solidly connect the *Output Neutral* of the UPS to ground with a ground bonding jumper.
For single module applications install the ground bonding jumper directly at the UPS output.
Cable size for this connection shall be per *National Electric Code* and applicable local regulations, but not less then AWG 3/0.

Attention: **With this configuration, *Load* can only be connected phase-phase.**
Absolutely no *Load Connection* permitted to the *Neutral of the output transformer*.
DO NOT install both a source *Neutral* and a bonding jumper!

RPA
Redundant Parallel Architecture

In a *RPA Parallel System* configuration it is most important to connect the *Neutrals* of the UPS outputs together.
The output distribution cabinet must contain a *Neutral Bus* (see *Fig .3.8.2-2).*
If no *Neutral Connection* is available with the *Bypass Input* (3-wire input + ground) and the *Load* does not require a *Neutral*, solidly connect the *Output Neutral* of the UPS to ground in the *Output Distribution Cabinet*.
Wire Neutral Conductors from the UPS to the output distribution cabinet (common point of connection) and solidly connect to ground with a ground bonding jumper.

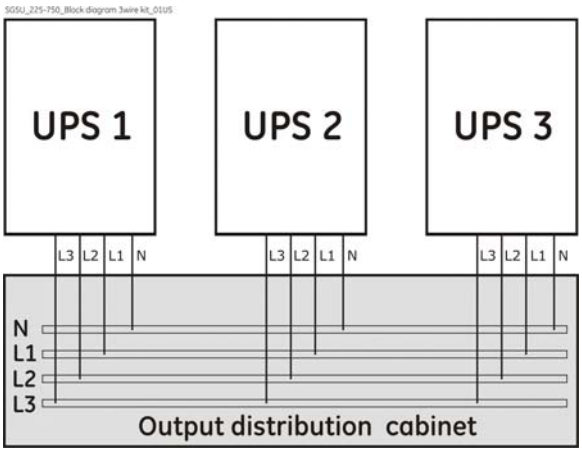

Fig. 3.8.2-2 RPA Parallel System

Cable size for the ground bonding jumper shall be per *National Electric Code* and applicable local regulations, but not less then AWG 3/0.

Attention: **DO NOT INSTALL both a source *Neutral* and a bonding jumper.**

If the UPS is equipped with an *Input Bypass Transformer*, the *Secondary* of the transformer must be wye-configured with *Neutral Solidly Grounded*.
The *Neutral of the Output Transformer* must be connected to the wye secondary winding of the *Bypass Transformer*.

eBoost™ Operation Mode

For installations intended to be operated in *eBoost™ Operation Mode*, the *Input Neutral Conductor* must be connected from the source of supply.
An *Input Neutral Conductor* MUST be pulled into the UPS.
Neutral to ground bonding jumper shall NOT be installed in UPS installations intended to be operated in *eBoost™ Operation Mode*.

Contact your *Service Center*, which will help you to find valuable solutions.

3.8.3 Power connection dual input utility (option)

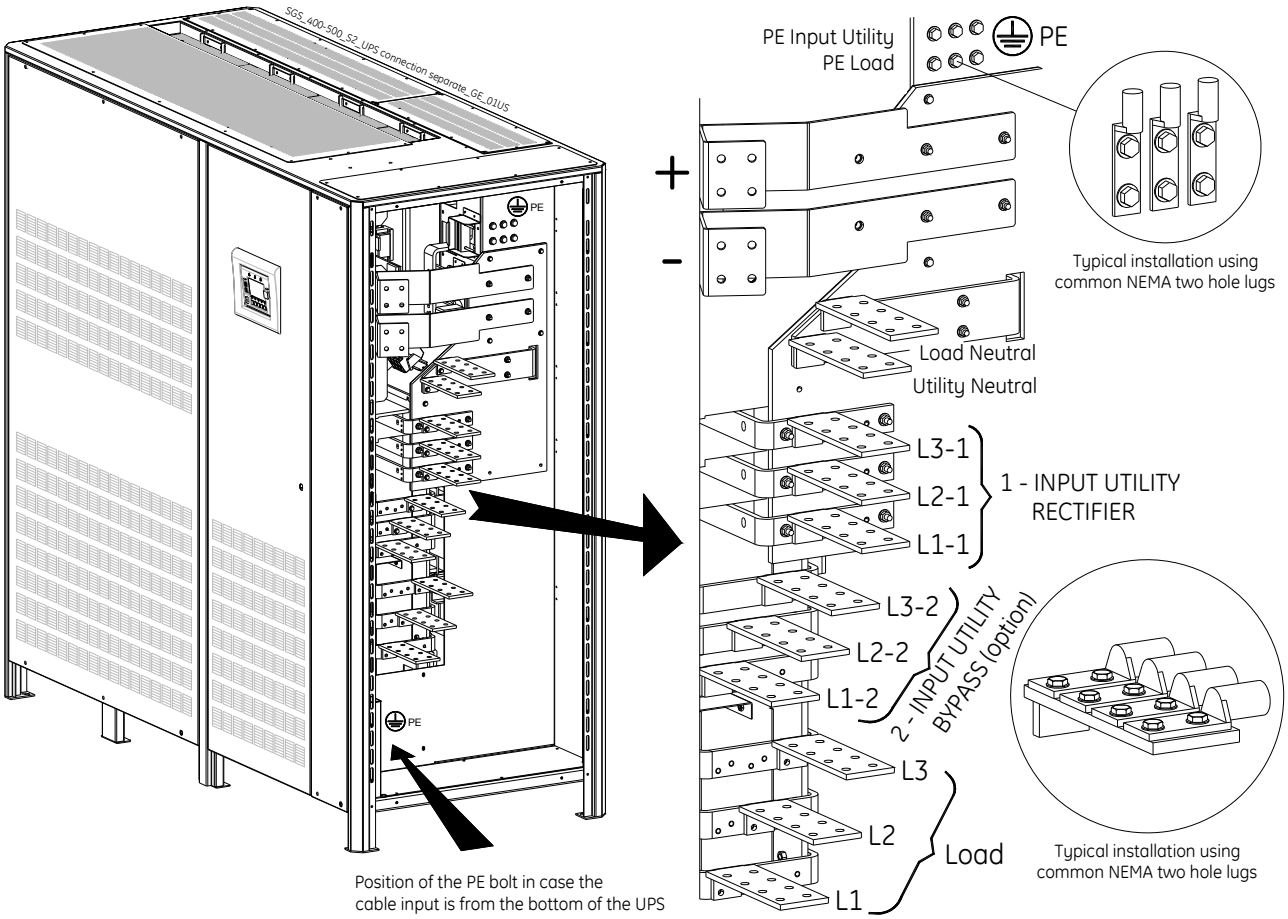

Fig. 3.8.3-1 Power connections Dual Input Utility (option)

Use 1/2" bolts for the cable connections on INPUT / OUTPUT power wiring *Bus Bars*.
Cable terminations are to the *Rectifier Input / Output Bus Bars* as shown above.
Connect wire to the *Bus Bars* using appropriate tools and appropriate torque.
Torque specification for two hole lugs on *Bus Bars*: see *Section 3.8.1*.

Dual Input Configuration Rectifier / Bypass (option)			
L1-1	Rectifier Phase A	**L1-2**	Bypass Phase A
L2-1	Rectifier Phase B	**L2-2**	Bypass Phase B
L3-1	Rectifier Phase C	**L3-2**	Bypass Phase C
PE Input Utility	Ground	**N - Bypass**	Bypass Neutral
⚠	**For dual input configurations, a neutral conductor is required from the bypass source only. The interconnection links *BR1*, *BR2* and *BR3* MUST BE REMOVED (see *Fig. 3.8.3-3*).**		

Output Load					
L1	Load Phase A	**L2**	Load Phase B	**L3**	Load Phase C
N	Load Neutral	**PE Load**	Load Ground		

NOTE !

This UPS is only designed to operate in a wye-configured electrical system with a solidly grounded neutral.
The UPS cannot be operated from a mid-point or end-point grounded delta supply source.

If the *Load* requires a *Neutral*, a *Bypass Source Neutral* MUST BE PROVIDED.
If no *Neutral Connection* is available with the *Bypass Input* (3-wire input + ground) and the *Load* does not require a *Neutral*, solidly connect the *Output Neutral* of the UPS to ground with a ground bonding jumper.
For single module applications install the ground bonding jumper directly at the UPS output.
Cable size for this connection shall be per *National Electric Code* and applicable local regulations, but not less then AWG 3/0.

Attention: **With this configuration, *Load* can only be connected phase-phase.**
Absolutely no *Load Connection* permitted to the *Neutral of the output transformer*.
DO NOT install both a source *Neutral* and a bonding jumper!

RPA
Redundant Parallel Architecture

In a *RPA Parallel System* configuration it is most important to connect the *Neutrals* of the UPS outputs together.
The output distribution cabinet must contain a *Neutral Bus* (see *Fig .3.8.3-2).*
If no *Neutral Connection* is available with the *Bypass Input* (3-wire input + ground) and the *Load* does not require a *Neutral*, solidly connect the *Output Neutral* of the UPS to ground in the *Output Distribution Cabinet.*
Wire Neutral Conductors from the UPS to the output distribution cabinet (common point of connection) and solidly connect to ground with a ground bonding jumper.

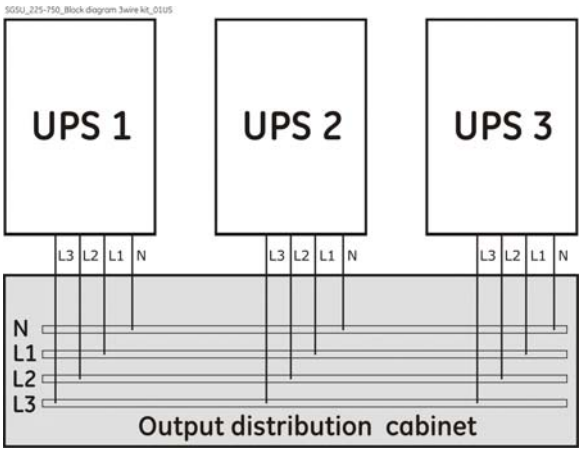

Fig. 3.8.3-2 RPA Parallel System

Cable size for the ground bonding jumper shall be per *National Electric Code* and applicable local regulations, but not less then AWG 3/0.

Attention: **DO NOT INSTALL both a source *Neutral* and a bonding jumper.**

If the UPS is equipped with an *Input Bypass Transformer*, the *Secondary* of the transformer must be wye-configured with *Neutral Solidly Grounded*.
The *Neutral of the Output Transformer* must be connected to the wye secondary winding of the *Bypass Transformer*.

eBoost™ Operation Mode

For installations intended to be operated in *eBoost™ Operation Mode*, the *Input Neutral Conductor* must be connected from the source of supply.
An *Input Neutral Conductor* MUST be pulled into the UPS.
Neutral to ground bonding jumper shall NOT be installed in UPS installations intended to be operated in *eBoost™ Operation Mode*.

Contact your *Service Center*, which will help you to find valuable solutions.

Notices for installation

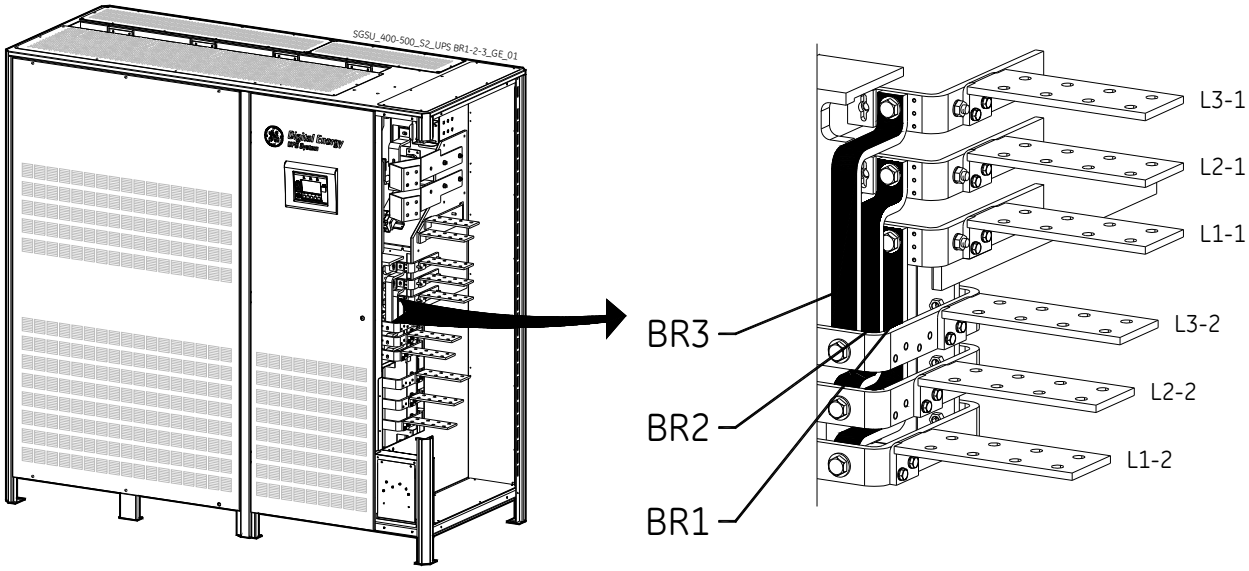

Fig. 3.8.3-3 AC bus bars BR1, BR2 and BR3

For separate *Bypass* and *Rectifier* input configuration (option), the AC *Bus Bars* ***BR1, BR2*** and ***BR3*** **MUST BE REMOVED**.

3.8.4 Battery and External Battery Breaker connection

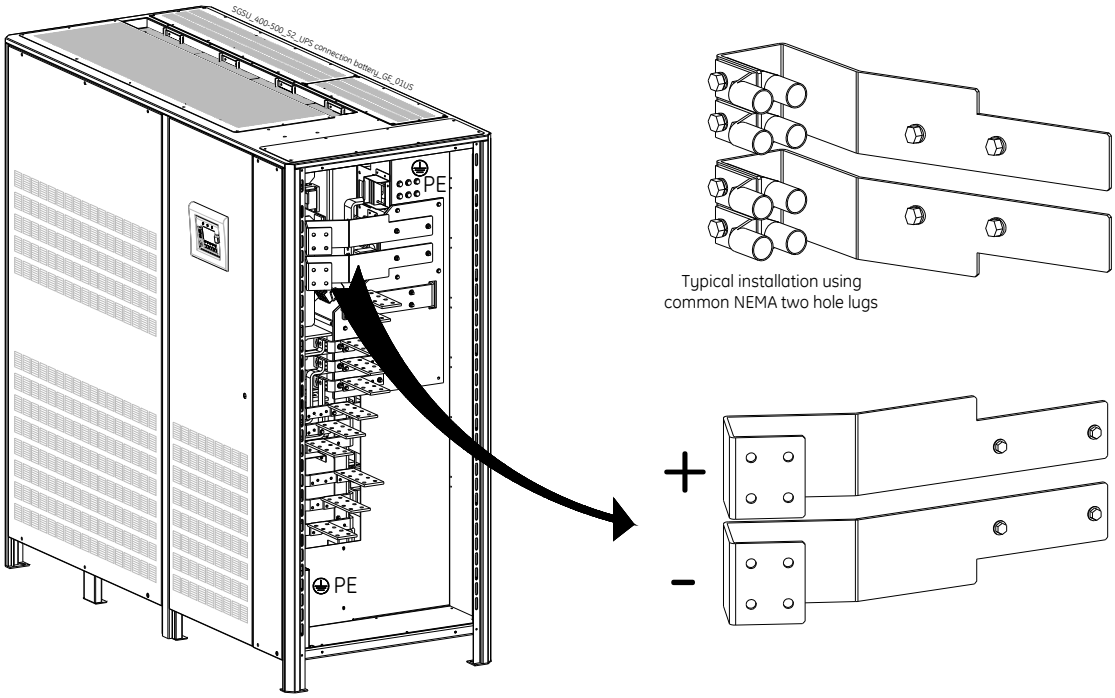

Fig. 3.8.4-1 Power connections Battery

Use 1/2" bolts for the cable connections on BATTERY power wiring *Bus Bars*.
Battery Cable Terminations are to the *Positive* and *Negative Terminals* as shown above.
Connect wire to the *Bus Bars* using appropriate tools and appropriate torque.
Torque specification for two hole lugs on *Bus Bars*: see *Section 3.8.1*.

Battery connection		
+	Positive pole of the battery	**Do not insert the *Battery Fuses* before the commissioning!**
-	Negative pole of the battery	
PE	Battery ground	

NOTE !

To meet standards concerning electromagnetic compliance, the connection between the UPS and external *Battery* must be done by using a shielded cable or suitable shielded (steel) conduit!

External Battery Breaker Release

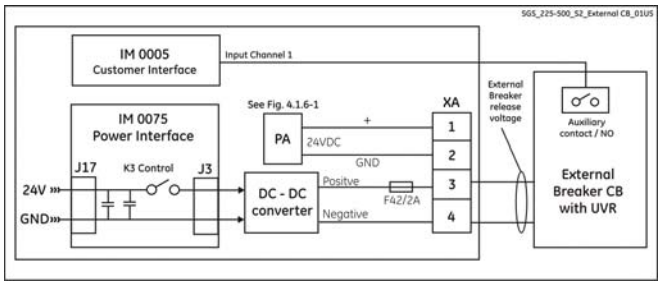

Fig. 3.8.4-2 External battery breaker connection

For connection or disconnection of the Battery an external breaker *CB* with *UVR* is required.

The *UVR* of the external breaker must be connected to terminal *XA* (see *Fig. 4.1.6-1*).

The release signal will allow, after the Rectifier soft-start, the manual closure of the breaker.

In either case, fuses or breaker, an auxiliary contact must signalize the closure of breaker or fuse holder to Input channel 1 of the *P4 - Customer Interface* (see *Section 4.1)*.
Contact must be open with Battery disconnected (Normally Open).

3.8.5 Interface to External Bypass for single unit

If the UPS system is equipped with an *External Maintenance Bypass Switch*, connect the *NO (normally open) voltage free auxiliary contact* from the *External Bypass Switch* to ***X4 - 1, 2*** of ***P27 – IM0108 - Interface for External Bypass*** inserted in the *Connectivity Rack*.

When this *NO (Normally Open)* contact closes, the *Inverter Output Contactor* ***K7*** opens and the *Load* transfer to *Inverter* will be inhibited.

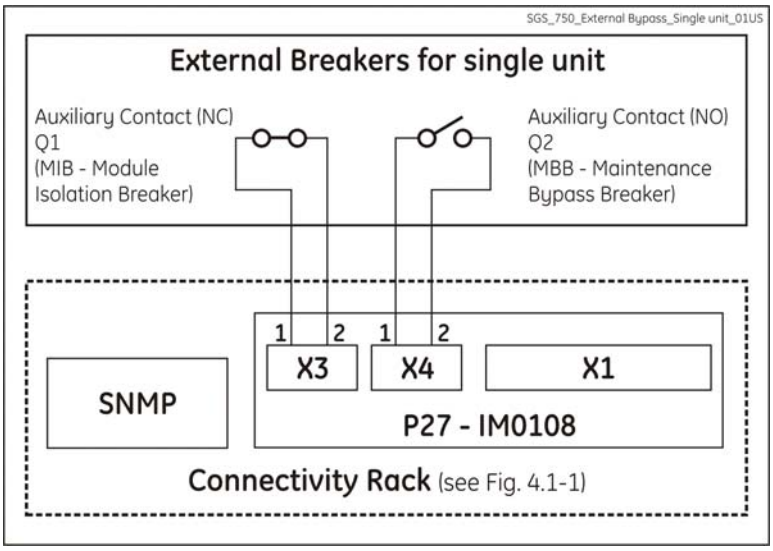

Fig. 3.8.5-1 Interface to External Bypass for single unit

SG Series 400 & 500 has to be interfaced to the *External Bypass Auxiliary Contacts* (NO) for safety reasons.
This will prevent *contactor K7* from closing when the *external bypass breaker* is on.

The connections shown in the diagram are mandatory.

3.8.6 Connections to External Bypass switch in case of RPA Parallel System

RPA
Redundant Parallel Architecture

In a parallel system, this connection must be made between each UPS to a separate AUX contact of the External Maintenance Bypass Switch.

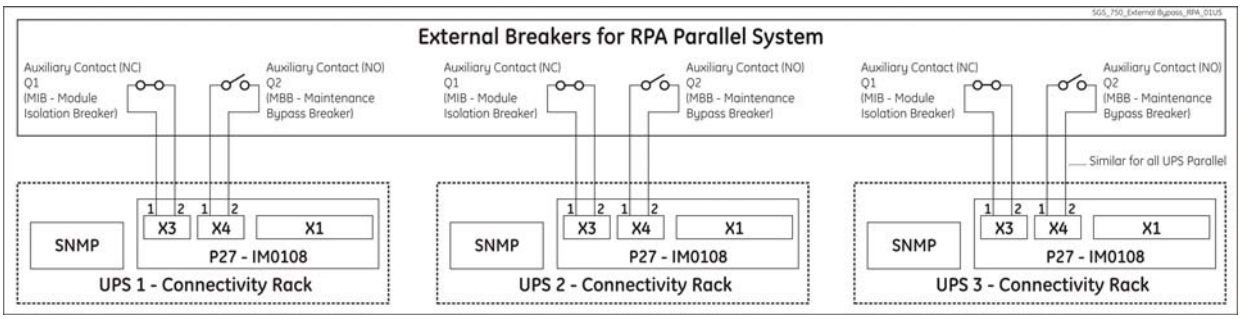

Fig. 3.8.6-1 Connections to External Bypass switch in case of RPA Parallel System

3.8.7 Setup for *SG Series 400 & 500* intended to be operated in eBoost™ Operation Mode

	NOTE ! **For systems intended to be operated in *eBoost™ Operation Mode*, the installation shall be protected with suitable surge protection devices (SPDs) on the AC bus feeding the UPSs.** **Please contact your *Service Center* for more information.**

RPA Redundant Parallel Architecture	***When using the "eBoost/IEMi control" function on the programmable user relays of the customer interface X1/J2 terminals in a Parallel System, a separate NO (Normally Open) contact must be connected to each individual unit.***

3.9 RPA PARALLEL SYSTEM CONNECTION

⚠	**WARNING !** **This operation must be performed by QUALIFIED SERVICE PERSONNEL ONLY before the initial start-up.** **ENSURE THAT THE UPS INSTALLATION IS COMPLETELY POWERED DOWN.**

3.9.1 Power wiring of parallel units

To guarantee good *Load* sharing between the units of a *Parallel System*, we recommend that the cable length from the input distribution board (5) to the output distribution board (9) is equal for each unit (a+b = c+d = e+f = g+h = i+l = m+n). Tolerance: **+/- 10%**.

The *RPA Cable Saver* option introduces a bypass inductor in every UPS module, minimizing the influence of external conductor length on bypass current sharing.
The *RPA Cable Saver* option extends the cable length tolerance to **+/-50%** for runs not exceeding **160 feet** (49m).

The AC input power of the *Bypass* must be the same for all units of the parallel system - no phase shift allowed between units.

⚠	**NOTE !** **It is strongly recommended that no transformers, automatic circuit breakers or fuses be inserted between the unit's output and the *Load* common bus bars.** **However, it is recommended that a disconnection or isolation switch be installed in order to totally isolate a unit if needed.**

Verify that power wiring and control wiring are run in separate conduits or cable trays.
UPS input cables must be run in separate conduits from the output cables.

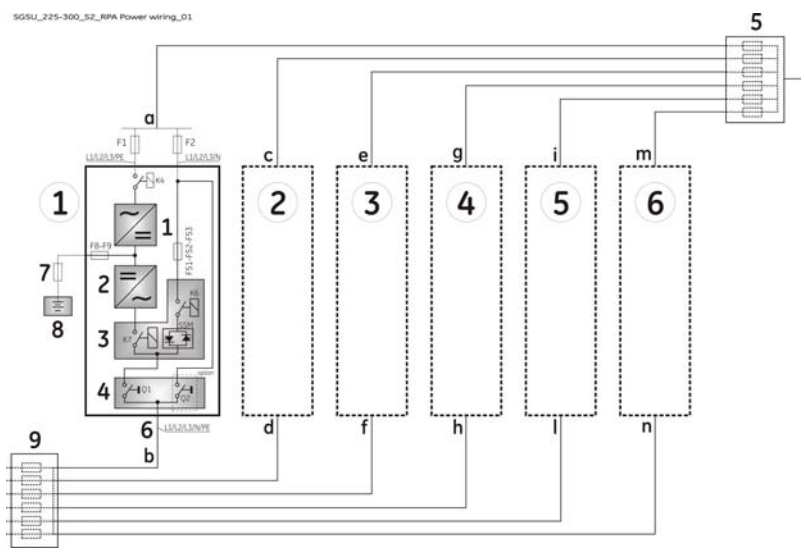

Fig. 3.9.1-1 Power wiring of RPA Parallel System

1	=	Rectifier
2	=	Inverter
3	=	Automatic Bypass
4	=	Manual Bypass (option)
5	=	Input Utility Distribution
6	=	Unit Output Load
7	=	External Battery fuse or MCB
8	=	External Battery
9	=	Common bus bar and Output Load Distribution
①	=	UPS Number 1
②	=	UPS Number 2
③	=	UPS Number 3
④	=	UPS Number 4
⑤	=	UPS Number 5
⑥	=	UPS Number 6

3.9.2 Parallel control bus connection

In cases of parallel operation, the communication between the units takes place through the **control bus cables**.

Each parallel unit is equipped with an additional board "***P13 – RPA Board***" where the connectors ***J52* (A)** and ***J62* (B)** are located.
A short control cable provided with a ferrite ring core links the parallel board "***P13 – RPA Board***" with the parallel bus socket on which must be connected the **control bus cables *JA*** and ***JB*** on PCB "***P34 – Bus Interface***".
All the parallel units are connected to the same control bus.

This connection allows:

- The microprocessors of each unit to communicate with each other.
- The oscillators of each unit to be locked together.
- The regulation loops to compare the output current of each unit in order to equally share the load current.

For increased reliability, this connection is made with redundant cables.
In this way, communication is maintained between units in case one of the control cables should fail or be accidentally damaged or disconnected.

The standard length of the control bus cable between two parallel unit is **40 ft / 12 m**.
Maximal overall length of bus connection, between the first and the last unit, should not be longer than **276 ft / 84 m**.
Verify that control wiring is run in individual separate steel conduit.

	NOTE ! **Under no circumstance should the control bus cable connecting *JA (1/2/3/4/5)* and *JB (1/2/3/4/5)* be connected or disconnected after the system has been powered On.**

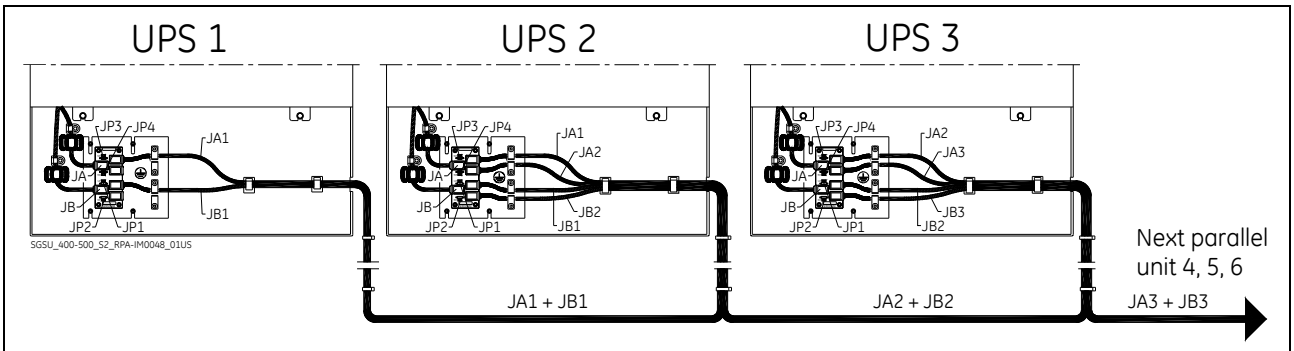

Fig. 3.9.2-1 RPA System - Control bus connection

The shield of the control bus cable, connected on *JA* and *JB* must be connected to ground with the appropriate cable clamps fitted on parallel bus socket.

It is important to place the units in sequence of their assigned number.
A unit number from ***1*** to ***6***, is defined by the setting of parameters and displayed on the panel.
This number is also marked inside and outside the packaging.

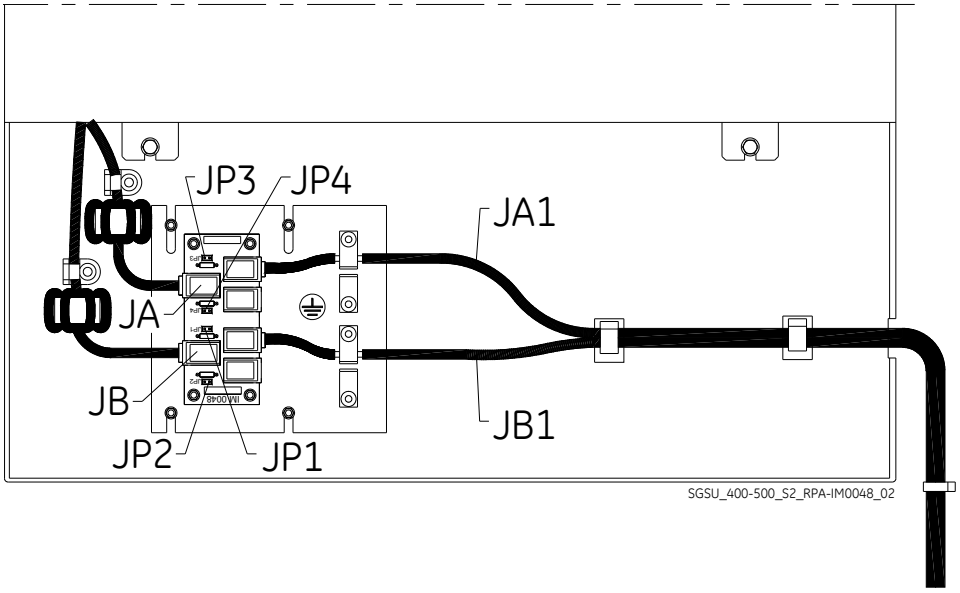

Fig. 3.9.2-2 Bus connection on terminal units

Terminal units

On the parallel bus PCB "***P34 – Bus Interface***", of the **first and last** units (terminal) of the parallel system the Jumpers ***JP1***, ***JP2***, ***JP3*** and ***JP4*** **MUST BE INSERTED**.

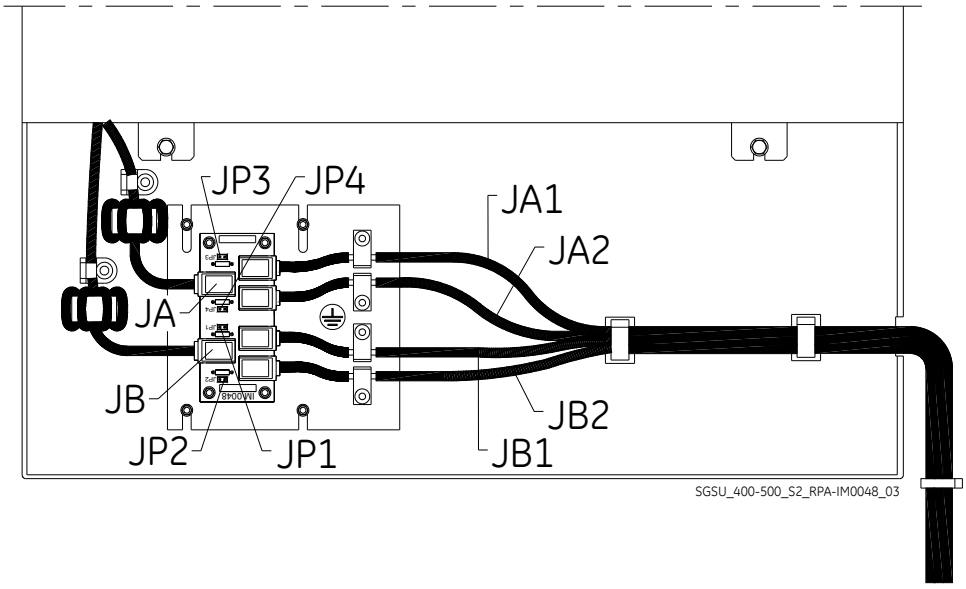

Fig. 3.9.2-3 Bus connection on intermediate units

Intermediate units

On the parallel bus PCB "***P34 – Bus Interface***" of the **intermediate units** of the parallel system the Jumpers ***JP1***, ***JP2***, ***JP3*** and ***JP4*** **MUST BE REMOVED**.

NOTE !

In a parallel system composed of 2 or more units, only the first and last units (having 1 input *JA* and *JB* free) have the Jumper *JP1*, *JP2*, *JP3* and *JP4* inserted on parallel bus PCB "*P34 – Bus Interface*" (see *Fig. 3.9.2-2*).

3.9.3 Control bus cable location

WARNING !

This operation must be performed by QUALIFIED SERVICE PERSONNEL ONLY before the initial start-up.

ENSURE THAT THE UPS INSTALLATION IS COMPLETELY POWERED DOWN.

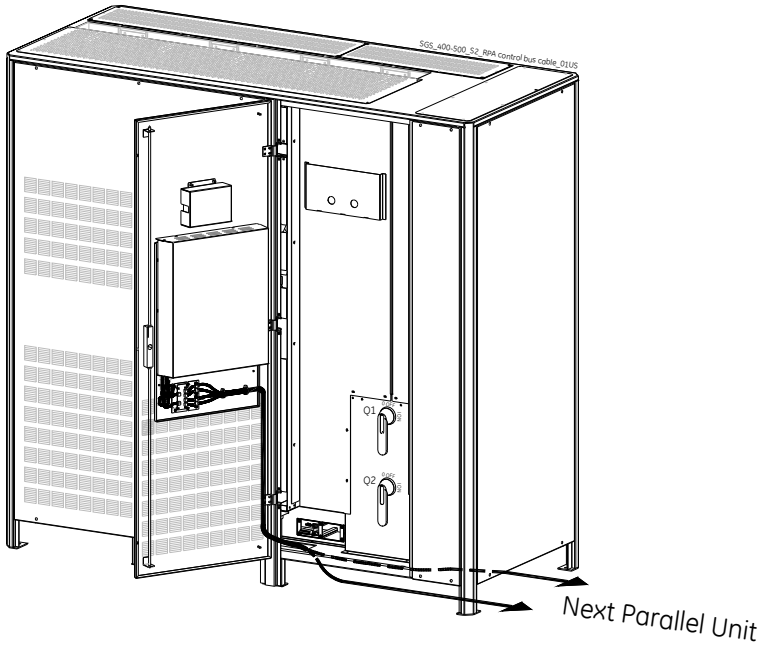

Fig. 3.9.3-1 View electronic module on intermediate unit

Access to the control bus connection.

The control bus connection between parallel units must be made on the ***electronic module*** (***P34 – Bus Interface***) situated at the inside of the UPS door.

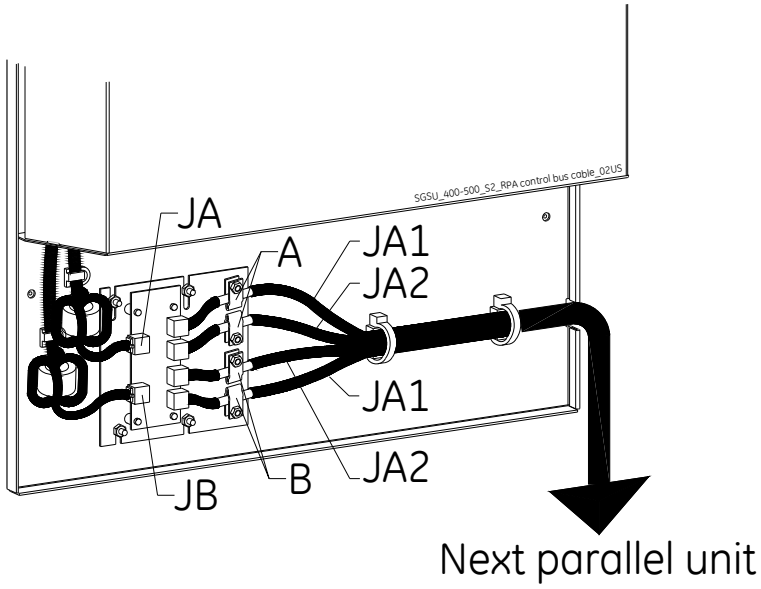

Fig. 3.9.3-2 Front view electronic module on intermediate unit

Control bus cables connection.

- Plug the cables ***JA*** *(1/2/3/4/5)* and ***JB*** *(1/2/3/4/5)* onto the RJ connectors ***JA*** and ***JB*** located on parallel bus PCB "***P34 – Bus Interface***" (going to *"P13 – RPA Board" J52(A)* and *J62(B)*.
- Fix both cables ***JA*** *(1/2/3/4/5)* and ***JB*** *(1/2/3/4/5)* to parallel bus socket connecting the cable shield to ground by means the cable clamps "***A***".

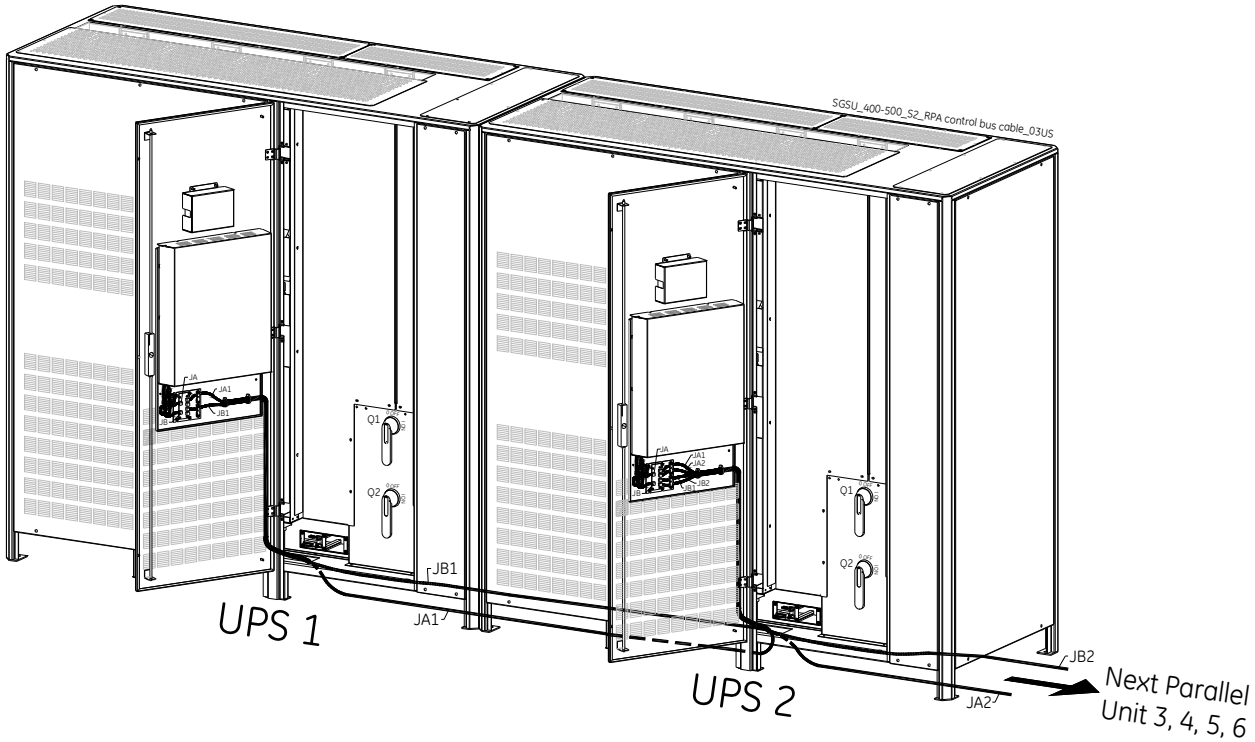

Fig. 3.9.3-3 Control bus cable routing and connection

Control bus cables routing

Place and fix the cables ***JA-1/2/3/4/5*** and ***JB-1/2/3/4/5*** inside the UPS cabinets in the position illustrated in the drawing.

	NOTE ! **Pay attention when cabling and routing the bus cables *JA* and *JB* inside the UPS cabinet.** **In case one unit should be removed from the parallel system, the bus cables *JA* and *JB* must be removed from the cabinet without disconnecting them from the metal plate where the sockets *JA* and *JB* are located.**

For reliability reasons the cables ***JA-1/2/3/4/5*** and ***JB-1/2/3/4/5*** connecting the units should be run in separated protected conduits (as indicated in *Fig. 3.9.3-3)* separated from the power cables.

It is important that the cable *JA* must be the same length as cable *JB*.

	WARNING ! **Connection and commissioning of an additional UPS to an existing parallel system, must be performed by a GE SERVICE ENGINEER from of your *Service Center*.**

4 CUSTOMER INTERFACE

4.1 CUSTOMER INTERFACE

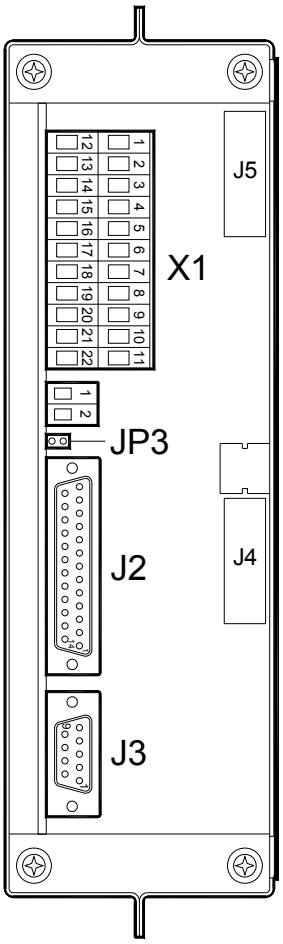

Fig. 4.1-1 Customer interface

Serial port J3 - RS 232 (sub D - female 9 pin) Suitable for JUMP protocol		
Pin 2: TX (out)	**Pin 3**: RX (in)	**Pin 5**: GND

J2 (subD-female 25p) – Output signals on voltage free contacts			
J2/1, 2, 3	NO, C, NC	Utility Failure	(default Parameter RL=1)
J2/4, 5, 6	NO, C, NC	Load on Inverter	(default Parameter RL=3)
J2/7, 8, 9	NO, C, NC	Stop Operation	(default Parameter RL=5)
J2/14, 15, 16	NO, C, NC	Load on Utility	(default Parameter RL=2)
J2/17, 18, 19	NO, C, NC	General Alarm	(default Parameter RL=4)
J2/20, 21, 22	NO, C, NC	Acoustic Alarm	(default Parameter RL=6)

Signals on terminals *X1* and on connector *J2* are in parallel and therefore not separated galvanically from each other.
The programmable signals on *X1* and *J2* will be disabled with *Q1* open, with the exception of the signals for *"16 - Manual Bypass ON"* and *"26 - EPO"*.

XB - Terminals for *EPO* connection			
XB/1, 4 or **J2/12, 25**	NC	*EPO* (Emergency Power Off)	See *Section 4.7.1*

Note: to enable this function, remove cable short-circuiting XB / 2 – 3 and the Jumper JP3 on P4 – Customer Interface.

X1 – Output signals on voltage free contacts - terminals			
X1/1, 2, 3	NO, C, NC	Utility Failure	(default Parameter RL=1)
X1/4, 5, 6	NO, C, NC	Load on Inverter	(default Parameter RL=3)
X1/7, 8, 9	NO, C, NC	Stop Operation	(default Parameter RL=5)
X1/12, 13, 14	NO, C, NC	Load on Utility	(default Parameter RL=2)
X1/15, 16, 17	NO, C, NC	General Alarm	(default Parameter RL=4)
X1/18, 19, 20	NO, C, NC	Acoustic Alarm	(default Parameter RL=6)

Input contacts	
X1/10, 21 or **J2/10, 23**	Programmable (default = RL1)
X1/11, 22 or **J2/11, 24**	Programmable / Generator ON (NO) (def. = RL2)

NO = Normally Open **C** = Common **NC** = Normally Closed

The connectors ***J4*** and ***J5*** can be used for additional ***3-ph SNMP/WEB plug-in adapter*** or an additional ***Customer Interface*** (installation only when the UPS is switched Off).

XA: terminals for 24Vdc Auxiliary Power Supply connection. **XB**: terminals for *EPO* connection.

Programmable user relays	
On terminals ***X1*** or ***J2*** connector, six of the following ***27 signals*** can be selected from the display, entering with the appropriate password.	
0- No Information	14- Rectifier Utility Failure
1- Buzzer	15- Battery Discharge
2- General Alarm	16- Manual Bypass ON
3- Load on Utility	17- Rectifier ON
4- Stop Operation	18- Inverter ON
5- Load on Inverter	19- Boost Charge
6- Utility Failure	20- Battery Earth Fault
7- DC Over Voltage	21- Battery Fault
8- Low Battery	22- Relay Input 1
9- Overload	23- Relay Input 2
10- Over Temperature	24- Relay Output ON
11- Inve.rter-Utility not syncr.	25- Relay Output OFF
12- Bypass Locked	26- *EPO* (Emergency Power Off)
13- Bypass Utility Failure	27- eBoost/IEMi mode

Programmable functions on contacts (X1 - J2)
Some UPS functions can be activated with parameters when an external Normally Open contact is closed on: **X1-10, 21 / J2-10, 23** or **X1-11, 22 / J2- 11, 24** Selectable functions by changing **parameters** (password required) are: **0 - No function** **1 - Inverter ON** **2 - Inverter OFF** **3 - Print All** **4 - Status Relay** **5 - Generator ON** **6 - External Bypass ON** **7 - External Battery Fuses, or External K3** **See Alarm 4104 - "Battery Fuses"** **8 – eBoost/IEMi control** **Voltage free contacts:** Max. DC / AC: 24V / 1.25A IEC 60950 (SELV circuit) Min. Signal Level: 5Vdc/5mA

4.1.1 Serial Port *J3*

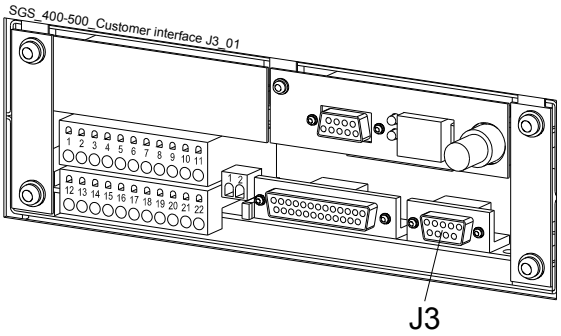

Fig. 4.1.1-1 Serial port J3

Serial port *J3* - *RS-232* (sub D, female 9 pin) that allows:

Total remote management of the system using software *GE Power Diagnostics, GE Data Protection* or *GE Service Software* for system protection and management of the UPS systems.

RPA
Redundant Parallel Architecture

The serial port *J3* - *RS232* is enabled on all the units of the parallel system.

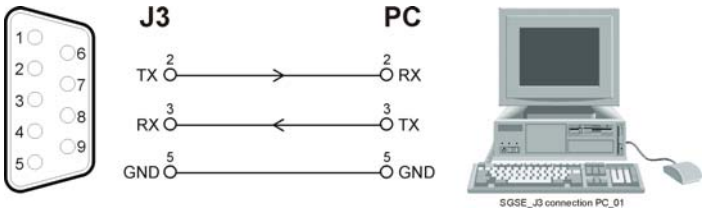

Fig. 4.1.1-2 Serial port J3 connection to PC with RS232 1:1 cable DB9m – DB9f

4.1.2 Output free potential contacts

The interface board provides **6 voltage free relay contacts** giving some UPS critical alarms and operation mode.
These signals are available either on connector ***J2*- (sub D, female 25 pin)** or terminal blocks ***X1***.

The meaning of the alarms on the free contacts in standard configuration (default) is the following:

X1 / 1, 2, 3	or	**J2 / 1, 2, 3**	**(NO, C, NC)**	**Utility Failure**
X1 / 4, 5, 6	or	**J2 / 4, 5, 6**	**(NO, C, NC)**	**Load on Inverter**
X1 / 7, 8, 9	or	**J2 / 7, 8, 9**	**(NO, C, NC)**	**Stop Operations**
X1 / 12, 13, 14	or	**J2 / 14, 15, 16**	**(NO, C, NC)**	**Load on Utility**
X1 / 15, 16, 17	or	**J2 / 17, 18, 19**	**(NO, C, NC)**	**General Alarm**
X1 / 18, 19, 20	or	**J2 / 20, 21, 22**	**(NO, C, NC)**	**Acoustic Alarm**

In case different alarms or operating status are required, they can be configured on the same terminals via software from the *control panel*.
The configuration can be changed in ***parameters mode*** by a trained operator using the appropriate password.

NOTE !
The programmable signals on *X1* and *J2* will be disabled with *Q1* open, with the exception of the signals for *"16 - Manual Bypass ON"* and *"26 - EPO"*.

4.1.3 Programmable input free contacts

Some programmable UPS functions (indicated in *Section 8.1*), can be activated by closing an external contact, if connected, on:

X1 / 10, 21	or	**J2 / 10, 23**	**User Input 1 (default = Not used)**
X1 / 11, 22	or	**J2 / 11, 24**	**User Input 2 (default = Emergency GEN ON)**

4.1.4 Gen Set Signaling (GEN ON)

If an emergency generator set supplies the UPS in case of *Mains Failure* and the generator is considerably unstable in frequency, it should be suitable to install the signal "***Generator ON***" on ***X1 / 11, 22*** or ***J2 / 11, 24***). See *Fig. 4.1-1 / X1* and *J2*.
Since the Parameter for of the reading of the Generator function is password protected, call the nearest *Service Center* for it's activation.

When this contact closes, it changes certain (programmable) functions such as:

- Enabling or disabling of synchronization and consequently the *Load* transfer to generator.
- Reduction or elimination or delay of *Battery* recharging during the generator operation.

Additionally, when the "***Generator ON***" input contact is closed, the UPS will inhibit *eBoost™ Operation Mode* and revert to double-conversion operation.

RPA Redundant Parallel Architecture

In a parallel system a separate NO (Normally Open) contact must be connected to each individual unit.

4.1.5 AUX external Maintenance Bypass

If the UPS system is equipped with an external *Maintenance Bypass Switch*, it is possible to connect a *NO* (Normally Open) voltage-free aux. contact from the *External Bypass Switch* to the programmable input ***X1 / 10, 21*** or ***J2 / 10, 23***, making the UPS operate as if the internal switch ***Q2*** has closed.

This function can be activated by changing a dedicated parameter (password required).

When this *NO* (Normally Open) contact closes, the output *Inverter Contactor* ***K7*** it is automatically opened and the *Load* transfer back to *Inverter* will be inhibited.

RPA Redundant Parallel Architecture

In a parallel system, the input on the customer interface of each unit must be connected to a separate AUX contact of the External Maintenance Bypass Switch.

4.1.6 Auxiliary Power Supply (APS) 24Vdc and Battery Breaker Release

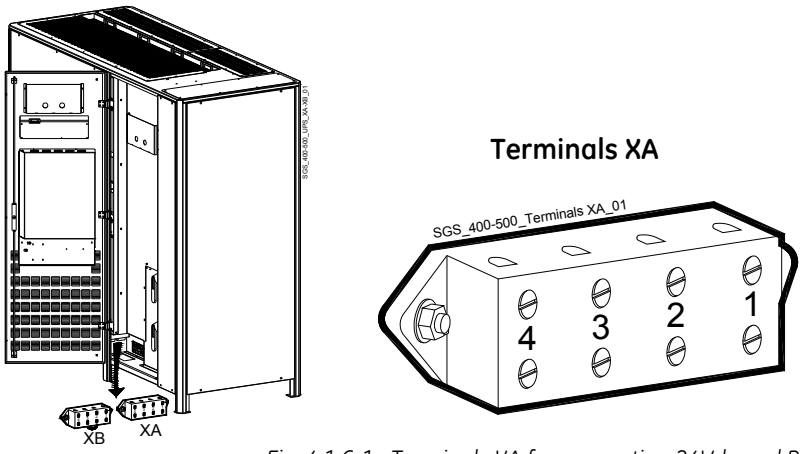

XA-1	24Vdc
XA-2	GND
XA-3	Positive (+) Battery Breaker Release Voltage
XA-4	Negative (-) Battery Breaker Release Voltage

Fig. 4.1.6-1 Terminals XA for connection 24Vdc and Battery Breaker Release

4.1.7 EPO (Emergency Power Off) Input contact

Be aware:
The reliability of the system depends on this contact NC (Normally Closed)!

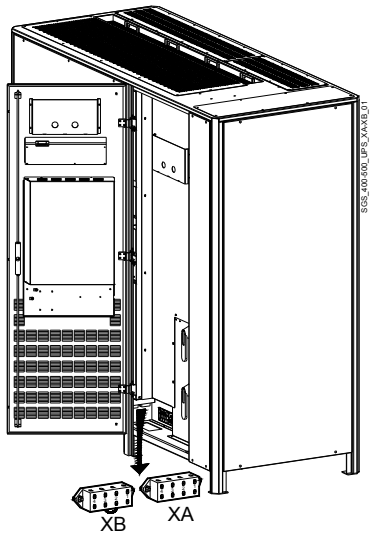

Terminals XB

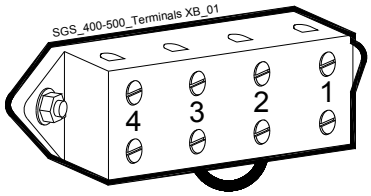

Fig. 4.1.7-1 Terminals XB for connection EPO

An external Emergency switch (Normally Closed voltage-free contact) can be connected on terminals ***XB / 1 - 4*** or connector ***J2 / 12 - 25*** of the ***P4 - Interface Customer***.

NOTE !
To enable this function, remove cable short-circuiting *XB / 2 - 3* on the *Terminal XB* and the *Jumper JP3 on P4 – Customer Interface*, when the cables have been already connected on *XB* or *J2*.

When opened, this contact causes the immediate opening of the *Bypass Contactors* ***K6*** and ***K7***, *Rectifier input contactor*, ***K4***, *External Battery Breaker* (if present) as well as the shutdown of the *Rectifier* and the *Inverter* and the *Static-Switch*.

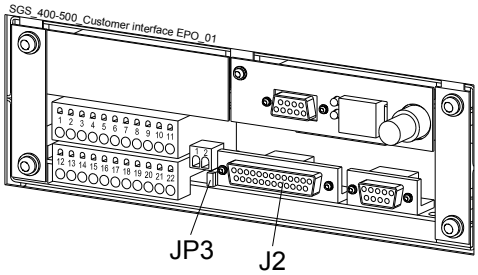

Fig. 4.1.7-2 Customer interface

NOTE ! **This procedure could imply a Load shutdown.**

NOTE !
In case of parallel *Customer Interface* the *EPO* contact must be connected to one *Customer Interface* only, but the bridge on *X2* and jumper *JP3* on the *P4 – Customer Interface* must be removed on all other boards.

RPA Redundant Parallel Architecture

In a parallel system a separate NC (Normally Closed) contact must be connected individually to each unit.

When the *EPO* has been activated, the system must be restored as follows:

- Press the push-button ***EPO*** (contact on *X7 / 1, 2* is closed again).
- Press the key *"**O**" (inverter off* – see *Section 5.2 – Operating Manual)* on the control panel.

RPA Redundant Parallel Architecture

In case of a parallel system press the key "O" (inverter off) on the control panel of each unit connected on the parallel bus and having its output switch Q1 closed.

5 NOTES

5.1 NOTES FORM

It is recommended to note in this section ***Notes***, with date and short description all the operations performed on the UPS, as: maintenance, components replacement, abnormal situations, etc.

Date	*Description*	*Done by*